Control component

XF0

PD

Stat.

Duct pressure control - static transducer

Control component for VAV terminal unit for duct pressure control

Compact device for use with VAV terminal units

- Controller, static differential pressure transducer and actuator are fitted together in one casing
- Duct pressure control in ventilation and air conditioning systems up to 2.21 in. w.g., e.g. pressure control in branch ducts
- Suitable for clean and contaminated air
- Constant value control P_{min} or variable control P_{min} – P_{max}
- Operating parameters P_{min} and P_{max} are set in the factory and saved in the controller
- Activation of override controls via external switch contacts
- Change of operating parameters using adjustment devices
- Service access for manual adjustment devices and PC configuration software

General information	2	Variants	6
Function	3	Technical data	7
Specification text	4	Product details	8
Order code	5	Nomenclature	11

General information

Application

- All-in-one control devices for duct pressure control
- Static differential pressure transducer, electronic controller, and actuator are fitted together in one casing
- Integration with central BMS or stand-alone operation
- Variable duct pressure control through default setting of setpoint values via analogue signal generated by the central building management system
- Constant value control for constant duct pressure without additional signalling thanks to set operating value
- Override controls for the activation of shut-off, OPEN position or control stop is possible via switch contacts or relay
- Pressure actual value is available as linear voltage signal

Control strategy

- Duct pressure fluctuations are compensated
- To prevent the control from becoming unstable, a dead band is allowed within which the damper blade does not move
- P_{min} : selected operating value of lowest duct pressure or constant value
- P_{max} : selected operating value of highest duct pressure
- Operating parameters are specified via the order code and set in the factory

Operating modes

- Variable or constant value

Variable operation (V)

- Setpoint value default setting via analogue interface
- Signal voltage range corresponds to P_{min} to P_{max}

Constant value mode (F)

- A setpoint value signal is not required
- Setpoint value is P_{min}

Interface

Analogue interface with adjustable signal voltage range

- Analogue signal for pressure setpoint value
- Analogue signal for pressure actual value

Signal voltage range

- 0 – 10 V DC
- 2 – 10 V DC

Operating parameters

- Observe the variable duct pressure range from 0.1--2.21 in.
- w.g. Reference point for the output signal: nominal pressure 2.4 in. w.g.

Parts and characteristics

- Transducer for static pressure measurements
- Overload protection
- Release button to allow for manual operation
- Terminals with cover
- Service interface
- Duct pressure testing set with duct pressure test plug and measuring tube included in supply package

Note:Depending on variant, e.g. acoustic cladding, differential pressure sensors or pressure connections of the control unit are not accessible for this attachment.

Construction

Type 227P-024-15-DS6 for control units of types

- TVR, TVJ, TZ-Silenzio, TA-Silenzio, TVZ, TVA, TVRK
- TVT up to 39.37 x 19.69

Commissioning

- Due to the duct pressures set in the factory, always ensure that the control units are only installed in the specified locations
- Install the control unit and wire up the control component
- Install the duct pressure tap and connect it to the control component via tubing
- The controller is then ready for use
- Operating parameters can be adjusted by the customer via the adjustment device

Useful additions

- Adjustment device type GUIV-A (order code AT-VAV-G)for type 227P-024-15-DS6

Function

A static differential pressure transducer converts the differential pressure into a voltage signal. The differential pressure actual value is available as a voltage signal. The factory setting is such that 10 V DC always corresponds to the nominal differential pressure ($\Delta_{p\ nom}$). The differential pressure setpoint value is either a constant value or it comes from a setpoint adjuster or from switch contacts. The controller compares the differential pressure setpoint value to the actual value and controls the actuator accordingly if there is a difference. Differential pressure parameters and signal voltage range are stored in the control component. Customers can easily make changes using an adjustment device or a notebook with service tool.

Principle of operation of type 227P-024-15-DS6

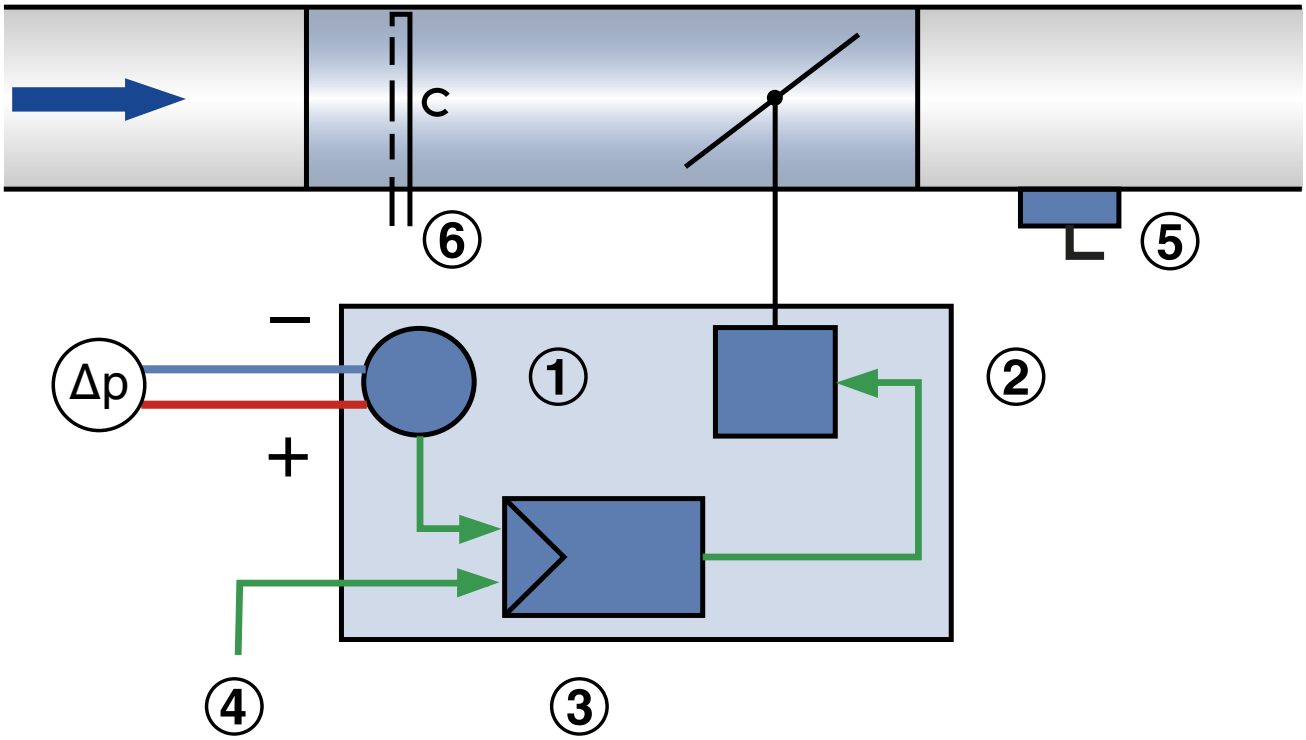

① Differential pressure transducer
② Actuator
③ Differential pressure controller
④ Setpoint value signal or constant value
⑤ Duct pressure measurement point
⑥ Differential pressure sensor of the VAV terminal unit (unused, depending on type and variant possibly not accessible or not available)
(Δ_p) Differential pressure connection at the transducer of the control component, depending on the installation situation (supply air/extract air):

- One connection side for duct pressure measurement - see ⑤
- Connect other connection side to pressure-stable reference measuring point

Specification text

This specification text describes the general characteristics of the product.

Category
- Compact controller for duct pressure
- Control of a constant or variable duct pressure setpoint
- Electronic controller for connecting a controlled variable and capturing an actual value signal
- The actual value signal is based on the nominal pressure such that commissioning and subsequent adjustment are simplified
- Stand-alone operation or integration in central building management system

Application
- Static transducer for duct pressure control in ventilation and air conditioning systems
- Control range 0.1 to 2.21 in. w.g.

Supply voltage
- 24 V AC / DC

Actuator
- Integral; slow running (running time 150 s for 90°)

Installation orientation
- Not critical

Interface/Signalling
- Analogue signals (0 – 10V or 2 – 10V DC)

Connection
- Connecting cable with 4 wires

Interface information
- Analogue
- Duct pressure setpoint and actual values

Special functions
- Activation P_{min}, P_{max}, Closed, Open, Control Stop by means of external switch contacts/circuitry

Parameter setting
- Operating parameters P_{min}, P_{max} factory set
- Signal characteristic factory set
- Subsequent adjustment using optional tools: adjustment device, PC software (cable connection in each case)

Condition upon delivery
- Electronic controller factory mounted on control unit
- Parameters are factory set (see sticker)
- Duct pressure testing set with duct pressure test plug and measuring tube included in supply package

Order code

TVR – D / 8 / D2 / XF0 / PDS / V / Pmin – Pmax
1 2 5 6 7 8 9 11

1 Type
TVR VAV terminal unit

2 Acoustic cladding
No entry required: None
D With acoustic cladding

3 Material
Galvanised sheet steel (Standard construction)
P1 Powder-coated RAL 7001, silver grey
A2 Stainless steel construction

5 Nominal size [in.]
4, 5 , 6, 8, 10

6 Accessories
No entry required: None
D2 Double lip seal both sides
G2 Matching flanges both sides

7 Attachments (control component)
XF0 Compact controller with dynamic transducer

8 Equipment function/Installation location
PDS Duct pressure control, supply air
PDE Duct pressure control, extract air

9 Operating mode
F Constant value (a setpoint value)
V Variable (setpoint value range)

10 Signal voltage range
0 0 – 10 V DC
2 2 – 10 V DC

11 Operating values for factory setting
Duct pressure in in. w.g.
P_{const} (only with operating mode F)
P_{vmin} (only with operating mode V)
P_{vmax} (only with operating mode V)

Order example: TVR 8/D2/XF0/PDS/V0/1.2-2.01in.w.g.

Acoustic cladding	without
Material	Galvanised sheet steel
Nominal size	4 in.
Accessories	Double lip seal both sides
Attachment	Compact controller for duct pressure
Equipment function/installation location	Duct pressure control, supply air
Operating mode	Variable operation – signal voltage range 0 –10 V DC
Operating value	1.2 - 2.01 in. w.g.

Order example: TVJ-D 23.62x11.81XF0/PDE/F2/1.81 in.w.g.

Acoustic cladding	With
Material	Galvanised sheet steel
Dimensions	23.62 x 11.81
Accessories	without
Attachment	Compact controller for duct pressure
Equipment function/installation location	Duct pressure control, extract air
Operating mode	Constant value mode, signal voltage range 2 – 10 V DC
Operating value	1.81 in. w.g.

Variants

Compact controller XF0, 227P-024-15-DS6

Compact controller XF0, 227P-024-15-DS6

① Compact controller
② Tube connections for differential pressure transducer
③ Service tool connection
④ Connecting cable
⑤ Gear release button

Technical data

Compact controllers for VAV terminal units

VAV terminal units	Type	Part number
TVR, TVJ, TVT, TZ-Silenzio, TA-Silenzio, TVZ, TVA, TVRK	227P-024-15-DS6	A00000038356

Compact controller XF0, 227P-024-15-DS6

Compact controller XF0, 227P-024-15-DS6

Supply voltage (AC)	24 V AC ± 20%, 50/60 Hz
Supply voltage (DC)	24 V DC ± 20 %
Power rating (AC)	5 VA max.
Power rating (DC)	Max. 2.5 W
Nominal pressure range	0 – 2.41 in. w.g.
Pressure control range	0.1 – 2.21 in. w.g.
Torque	15 Nm
Setpoint value signal input	0 – 10 V DC, Ra > 100 kΩ or 2 – 10 V DC, Ra > 50 kΩ
Actual value signal output	0 – 10 V DC or 2 – 10 V DC, 0.5 mA max.
IEC protection class	III (protective extra-low voltage)
Protection level	IP 42
EC conformity	EMC to 2014/30/EU

Product details

Analogue interface 0 – 10 V or 2 – 10 V DC (operating mode V, F)

The analogue interface can be set for signal voltage range 0 – 10 V DC or 2 – 10 V DC. The assignment of the duct pressure setpoint value or actual value to a voltage signal is shown in the characteristic curves.

- The set signal voltage range applies to both setpoint value and actual value signals
- The signal voltage range is pre-set in the factory in accordance with the order code entries
- The signal voltage range can be adjusted by others with an adjustment device

Setpoint value default setting

Variable operation

- In operating mode V (variable operation), the setpoint comes from an analogue signal on terminal Y
- The selected signal voltage range 0 – 10V or 2 – 10V DC is assigned to the pressure range P_{min} – P_{max} .
- Operating values P_{min} – P_{max} preset at the factory according to the order code
- Subsequent adjustment of P_{min} or P_{max} is possible with adjustment device

Constant value mode

- In the operating mode F (constant value mode), an analogue signal is not required on terminal Y
- The set duct pressure constant value P_{min} is used.
- Operating value P_{min} is preset at the factory according to the order code
- Subsequent adjustment of P_{min} is possible with adjustment device

Actual value as feedback for monitoring or tracking control

- The actual duct pressure measured by the controller can be captured as a voltage signal at terminal U
- The selected signal voltage range 0 – 10V DC or 2 – 10V DC is converted to the pressure range 0 – $P_{Nominal}$.
- Reference point $P_{Nominal}$ = 600 Pa

Override control

For special operating situations, the duct pressure controller can be put in a special operating mode (override control).
The following modes are possible: control P_{min}, control P_{max}, damper blade in the OPEN position, damper blade CLOSED.
Under certain conditions, the control can also be suspended (control stop).

Override control via signal input Y

With appropriate wiring on the signal input Y, the override controls can be activated according to the connection diagrams via wiring with external switch contacts/relays.
OPEN and CLOSED are only available if the controller is supplied with alternating current (AC).
In the signal voltage range 2 – 10 V, the differential pressure control can be suspended (stop) by connecting input Y to GND.

Override control CLOSED via control signal Y

- With signal voltage range 0 – 10 V DC: CLOSED is activated when P_{min} = 0 is set and control signal Y < 0.5 V DC
- With signal voltage range 2 – 10V DC: CLOSED is activated when control signal is Y < 0.8V $_{(*1)}$ DC

  $_{(*1)}$ 0.8V = factory setting

Override control for diagnostic purposes

- For test purposes, the override control can also be activated via the service tools (adjustment device, PC software).

Prioritisation of various setting options

- High priority: settings via the service connector (adjustment device, PC software) for test purposes
- Low priority: settings via Y signal input of the controller

Characteristic of the setpoint value signal

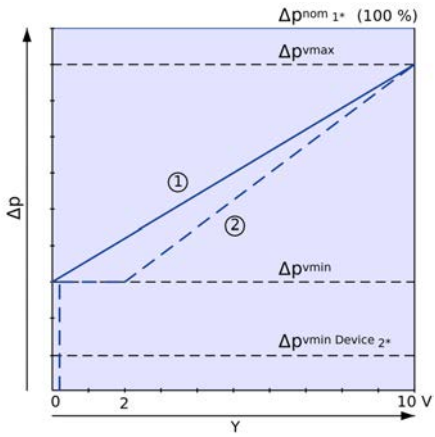

① Signal voltage range 0 – 10 V
② Signal voltage range 2 – 10 V
1* = Δp_{nom} Nominal pressure difference
2* = Δp_{min} Device Minimum adjustable pressure difference

Characteristic of the actual value signal

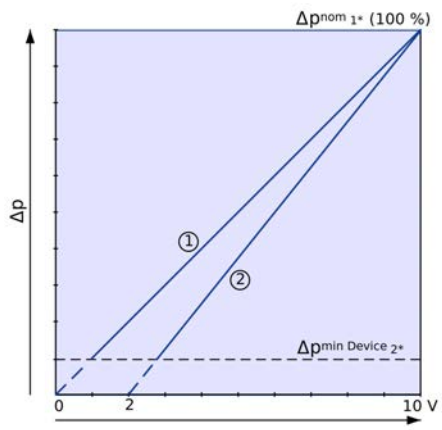

① Signal voltage range 0 – 10 V
② Signal voltage range 2 – 10 V
1* = Δp_{nom} Nominal pressure difference
2* = $\Delta p_{min\ Device}$ Minimum adjustable pressure difference

Calculation of differential pressure setpoint value for 0 – 10 V

$$\Delta p_{set} = \frac{w}{10}\,(\Delta p_{max} - \Delta p_{min}) + \Delta p_{min}$$

Calculation of differential pressure actual value for 0 – 10 V

$$\Delta p_{act} = \frac{U5}{10} \times \Delta p_{nom}$$

Calculation of differential pressure setpoint value for 2 – 10 V

$$\Delta p_{Set} = \frac{w-2}{8}\,(\Delta p_{max} - \Delta p_{min}) + \Delta p_{min}$$

Calculation of differential pressure actual value for 2 – 10 V

$$\Delta p_{act} = \frac{U5-2}{8} \times \Delta p_{nom}$$

Commissioning

- On-site adjusting is not required
- Due to the duct pressures set in the factory, always ensure that the control units are only installed in the specified locations
- Install control unit in the duct section to be controlled
- Set up a pressure measurement point

For supply air:

- Connect the positive connection point of the controller to the duct to be controlled
- Leave the negative connection point of the controller open

For extract air:

- Leave the positive connection point of the controller open
- Connect the negative connection point of the controller to the duct to be controlled
- The duct connection has to be on the side facing away from the fan
- Note duct pressure control ranges as per technical data
- Establish electrical wiring connection
- The controller is then ready for use

Connecting cable core identification for 227V-024-15-DS3 (for TVR, TVJ, TVT, TZ-Silenzio, TA-Silenzio, TVZ, TVA, TVM)

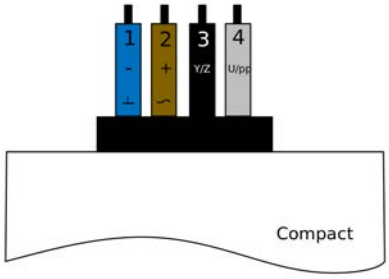

1: BU, ⊥, –: Ground, neutral
2: BN, ~, +: Supply voltage 24 V
3: BK, Y/Z: Setpoint value signal Y and override control
4: GY, U/pp: Actual value signal for service tool

Variable duct pressure control and override control

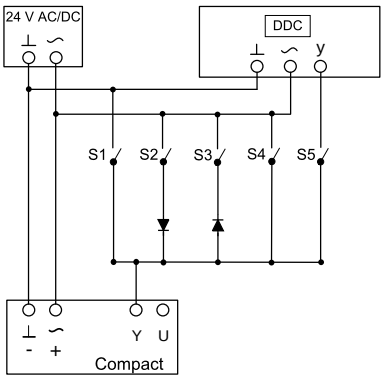

Switch functions:
S1: Control stop at (only with signal voltage range 2 - 10 V)
S2: Damper blade OPEN (only with supply voltage 24 V AC)
S3: Damper blade CLOSED (only with supply voltage 24 V AC)
S4: Setpoint value setting P_{max} activation
S5: Setpoint value default setting - variable duct pressure via control signal

All switches open (input open): Constant value mode with Setpoint value default setting P_{min}

T, VOC, CO2, DDC = Setpoint value default setting
When combining several override controls the switches must be interlocked to prevent short-circuits.
Diode: e.g. 1N 4007

Nomenclature

Δ_{pNom} [in. w.g.]
Nominal pressure (100 %): Maximum differential pressure that can be detected by the pressure transducer and converted into an electrical signal. Please note that the adjustable differential pressure range is only a range of the nominal pressure and cannot be fully utilised (see technical data). Δ_{pNom} is the reference value for defining Δ_{pmin} and Δ_{pmax}.

Δ_{pmax} [in. w.g.]
Upper limit of the operating range of the duct pressure controller adjustable by the customer (note usable control range see technical data). For analogue control of duct pressure controllers (typically used), the maximum value of the setpoint signal (10 V) is assigned the set maximum value (Δ_{pmax}) (see characteristic).

Δ_{pmin} [in. w.g.]
Customer-adjustable lower limit of the operating range of the duct pressure controller: Δ_{pmin} should be set to less than or equal to Δ_{pmax}. Δ_{pmin} should not be set lower than the lower control range, otherwise the control is unstable. With analogue control, the minimum value of the setpoint signal (0 or 2 V) is assigned the set minimum value Δ_{pmin} (see characteristic).

Δ_{p} [in. w.g.]
Differential pressure

Duct pressure controller
Consists of a basic unit and an attached control component for duct pressure control

Basic unit(for duct pressure controller)
Control unit without attached control component. The main components are the casing and the damper blade to control the differential pressure in the relevant section of the air duct.
Important distinguishing features:
Geometry or unit shape, material and types of connection, acoustic characteristics (e.g. acoustic cladding option or integral silencers).
For manufacturing reasons, the basic unit is based on the basic units for volume flow control and is therefore also referred to as a VAV terminal unit. Sensor elements of the VAV terminal unit are therefore usually present, but are not accessible in all construction variants, e.g. acoustic cladding.
The pressure measurement point is typically placed in the air duct downstream of the terminal unit.

Control component (for duct pressure controller)
Electronic unit(s) mounted on the basic unit to control the pressure in an air duct section (e.g. branch) by adjusting the control damper position.
The electronic unit essentially consists of a controller with differential pressure transducer (integral or external) and an actuator, which is an integral part of compact controllers and separately supplied for universal controllers, e.g. to define additional functions such as a safe position.
Important distinguishing features:

- Transducers: Measuring and control range
- Actuator variants VARYCONTROL universal controller:
  - Standard actuator, slow-running
  - Spring return actuator for damper blade safety function
- Actuator variants TROX UNIVERSAL:
  - Standard actuator, slow-running
  - Spring return actuator for damper blade safety function
  - Fast-running actuator
- Interface technology:
  Analogue interface or digital bus interface for the capturing and transmission of signals and information only with TROX UNIVERSAL: various expansion modules can be used, e.g. for simultaneous volume flow rate measurement.