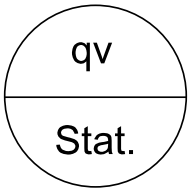

Volume flow controller – static transducer

XD0 for TVR, TVJ, TVT, TZ-SILENZIO, TA-SILENZIO, TVZ, TVA, TVRK

Control component

XD0

Control component for VAV terminal unit with static transducer

Compact device for use with VAV terminal units

- Controller, static effective pressure transducer and actuator in one casing
- Use in ventilation and air conditioning systems, with clean and contaminated air
- Suitable for constant and variable volume flows
- Activation of override controls by means of external switch contacts
- Volume flow rates q_{vmin} and q_{vmax} are factory set and stored in the controller
- Change of operating parameters by means of adjustment device
- Service access for manual adjustment devices and PC configuration software

General information	2	Variants	6
Function	3	Technical data	7
Specification text	4	Product details	9
Order code	5	Nomenclature	12

General information

Application
- All-in-one control devices for VAV terminal units
- Static differential pressure transducer, electronic controller, and actuator are fitted together in one casing
- For a wider range of applications with clean and contaminated air, e.g. for extract air with dust or fluff
- Choice of various control options based on setpoint value default setting
- Volume flow rate control is based on setpoint values received from room temperature controller, central BMS, air quality controller or other devices as an analogue signal.
- Override controls for activating q_{vmin}, q_{vmax}, shut-off or OPEN position can be set with a switch or relay
- The volume flow rate actual value is available as a linear voltage signal

Control strategy
- The volume flow controller works independent of the duct pressure
- Differential pressure fluctuations do not result in permanent volume flow rate changes
- To prevent the control from becoming unstable, a dead band is allowed within which the damper blade does not move.
- The flow rate range for the controller is set in the factoryq_{vmin}: minimum volume flow rateq_{vmax}: maximum volume flow rate
- Operating parameters are set in the factory according to the order code

Operating modes
- Variable or constant value
- Variable operation (V)
- Setpoint value default setting via analogue interface
  - Signal voltage range corresponds to q_{vmin} to q_{vmax}
- Constant value mode (F)
  - A setpoint signal is not required, setpoint value corresponds to q_{vmin}

Interface
Analogue interface with adjustable signal voltage range
- Analogue signal for volume flow rate setpoint value
- Analogue signal for volume flow rate actual value (factory setting), alternatively: analogue signal for damper blade position (adjustment by others required)

Signal voltage ranges
- 0 – 10 V DC
- 2 – 10 V DC

Parts and characteristics
- Transducer for static pressure measurements
- Overload protection
- Release button to allow for manual operation
- Connecting cable with 4 wires, approx. 2.95 ft., halogen-
- free Service interface

Construction
227V-024-15-DS3 for volume flow controller
- TVR, TVJ, TZ-Silenzio, TA-Silenzio, TVZ, TVA, TVRK
- TVT (up to 39.37 x 19.69 in.)

Commissioning
- As the volume flow rates are factory set, the terminal units have to be installed at the specified locations
- After successful installation and wiring, the controller is ready for use
- Operating parameters can be adjusted by others using the adjustment device

Useful additions
- Adjustment device GUIV-A (order code AT-VAV-G)

Function

VAV terminal units control the volume flow in a closed loop, i.e. measurement – comparison – correction.
For volume flow rate measurement the effective pressure is measured first. This is done with a differential pressure sensor. The integral differential pressure transducer transforms the effective pressure into a voltage signal. The volume flow rate actual value is available as a voltage signal. The factory setting is such that 10 V DC always corresponds to the nominal flow rate (q_{vnom}).

The volume flow rate setpoint value comes from a higher-level controller (e.g. room temperature controller, air quality controller, central BMS). Variable volume flow control results in a value between q_{vmin} and q_{vmax}. It is possible to override the room temperature control, e.g. by a complete shut-off of the duct.
The controller compares the differential pressure setpoint value to the actual value and controls the actuator accordingly if there is a difference.

Principle of operation – Type 227V-024-15-DS3 (TVT, TVJ, TZ-Silenzio, TA-Silenzio, TVZ, TVA, TVRK)

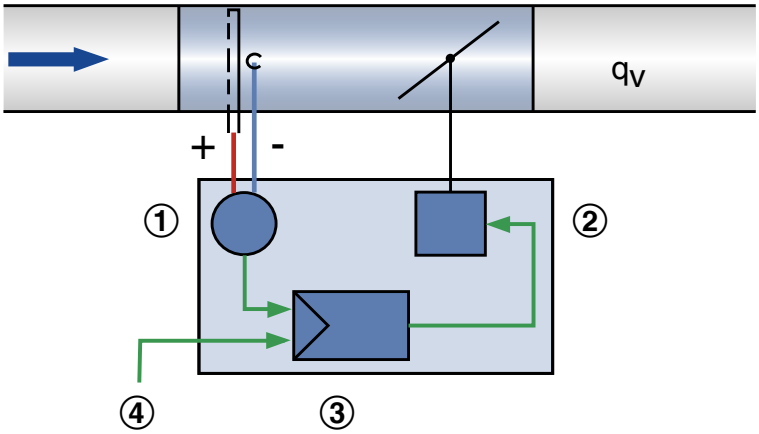

① Differential pressure transducer
② Actuator
③ Volume flow controller
④ Setpoint value signal

Specification text

This specification text describes the general properties of the product.

Category
- Compact controller for volume flow control
- Control of a constant or variable volume flow rate setpoint
- Electronic controller for applying a reference value and capturing an actual value
- The actual value relates to the nominal volume flow rate such that commissioning and subsequent adjustment are simplified
- Stand-alone operation or integration with a central BMS

Application
- Static transducer for contaminated air in ventilation and air conditioning systems

Supply voltage
- 24 V AC/DC

Actuator
- Integral; slow-running (run time < 150 s for 90°)

Installation orientation
- Either direction

Interface/signalling
- Analogue signals (0 – 10 V or 2 – 10 V DC)

Connection
- Connecting cable with 4 wires

Interface information
Analogue:
- Volume flow rate actual value and setpoint value
- Flow rate actual value: factory set
- The flow rate actual value cannot be adjusted by adjusting the damper blade position

Special functions
- Activation of q_{vmin}, q_{vmax}, CLOSED and OPEN by means of external switch contacts

Parameter setting
- Parameters specific to the VAV terminal unit are factory set
- Operating values: q_{vmin}, q_{vmax} andinterface type are factory set
- Subsequent adjustment using optional tools: adjustment device, PC software (wired in each case)

Factory condition
- Electronic controller is factory mounted on the control unit
- Factory-set parameters
- Functional test with air (see sticker)

Order code

TVR – D / 8 / D2 / XD0 / V 0 / qvmin – qvmax m³/h
1 2 5 6 7 8 9 10 11

1 Type
TVR VAV terminal unit

2 Acoustic cladding
No entry: none
D With acoustic cladding

3 Material
Galvanised sheet steel (standard construction) **P1**
Powder-coated RAL 7001, silver grey
A2 Stainless steel construction

5 Nominal size [in.]
4, 5 , 6, 8, 10

6 Accessories
No entry: none
D2 Double lip seal both ends
G2 Matching flanges for both ends

7 Attachments (control components
XD0 Compact controller with static transducer

8 Operating mode
F Constant value (one setpoint value)
V Variable (setpoint value range)

9 Signal voltage range
0 0 – 10 V DC
2 2 – 10 V DC

10 Operating values for factory setting
Volume flow rates in cfm
q_{vconst} (only with operating mode F)
q_{vmin} (only with operating mode V)
q_{vmax} (only with operating mode V)

11 Volume flow rate unit
cfm

Order example: TVR/4/D2/XD0/V0/29.43-208.3 cfm

Acoustic cladding	Without
Material	Galvanised sheet steel
Nominal size	4 in.
Accessories	Double lip seal both ends
Attachment	Compact controller with static transducer
Operating mode	Variable operation – signal voltage range 0 –10 V DC
Volume flow rate	29.43 - 208.3 cfm

Order example: TVJ-D/23.62x11.81/XD0/F2/3531.47 cfm

Acoustic cladding	With
Material	Galvanised sheet steel
Dimensions	23.62 x 11.81
Accessories	Without
Attachment	Compact controller with static transducer
Operating mode	Constant value mode, signal voltage range 2 – 10 V DC
Volume flow rate	3531.47 cfm

Variants

Compact controller XD0, 227V-024-10-DS3

① Compact controller
② Connections for effective pressure transducer
③ Service tool connection
④ Connecting cable
⑤ Gear release button

Actuator 227P-024-15-DS3

Reverse side with rating plate

Technical data

Compact controller for VAV terminal units

VAV terminal units	Type of installation component	Part number
TVR, TVJ, TVT, TZ-Silenzio, TA-Silenzio, TVZ, TVA, TVRK	227V-024-15-DS3	A00000038351

Actuator 227V-024-15-DS3

XD0 for TVR, TVJ, TVT, TZ-SILENZIO, TA-SILENZIO, TVZ, TVA, TVRK

Compact controller 227V-024-15-DS3

Measurement principle	Static
Supply voltage (AC)	24 V AC ± 20%, 50/60 Hz
Supply voltage (DC)	24 V DC ± 20 %
Power rating (AC)	3.5 VA max.
Power rating (DC)	2 W max.
Power consumption (when running/when idle)	1.0 W
Torque	15 Nm
Run time for 90°	approx. 150 s
Setpoint value signal input	0 – 10 V DC, Ra > 100 kΩ or 2 – 10 V DC, Ra > 50 kΩ
Actual value signal output	0 – 10 V DC or 2 – 10 V DC, 0.5 mA max.
Connection	Cable 4 × 0.001 in²
IEC protection class	III (protective extra-low voltage)
Protection level	IP 42
EC conformity	EMC to 2014/30/EU
Weight	0.99 lbs

Product details

Analogue interface 0 – 10 V or 2 – 10 V DC (operating mode V, F)

The analogue interface can be set for signal voltage range 0 – 10 V DC or 2 – 10 V DC. The assignment of the volume flow rate setpoint value or actual value to a voltage signal is shown in the characteristic curves.

- The set signal voltage range applies to both setpoint value and actual value signals.
- The signal voltage range is set in the factory according to the order code
- The signal voltage range can be adjusted with an adjustment device (by others)

Setpoint value default setting

Operating mode V (variable operation)

- The setpoint comes from an analogue signal on terminal Y
- The selected signal voltage range 0 – 10V or 2 – 10V DC is mapped to the volume flow rate range q_{vmin} – q_{vmax}
- Volume flow rate range q_{vmin} – q_{vmax} is set in the factory according to the order code
- Subsequent adjustment of q_{vmin} or q_{vmax} is possible with an adjustment device

Operating mode F (constant value mode)

- No analogue signal required at terminal Y
- The set flow rate constant value q_{vmin} is used
- Volume flow rate q_{vmin} is set in the factory according to the order code
- Subsequent adjustment of q_{vmin} is possible with an adjustment device

Actual value as feedback for monitoring or tracking control

- The actual volume flow rate measured by the controller can be captured as a voltage signal at terminal U
- The selected signal voltage range 0 – 10 V DC or 2 – 10 V DC is mapped to the volume flow rate range 0 – q_{vnom}

Override control

For special operating situations, the volume flow controller can be put in a special operating mode (override control). The following modes are possible: control q_{vmin}, control q_{vmax}, damper blade in the OPEN position or damper blade CLOSED.

Override control via signal input Y

With appropriate wiring on the signal input Y, the override controls can be activated according to the connection diagrams via wiring with external switch contacts/relays. OPEN and CLOSE are only available if the controller is supplied with alternating current (AC).

Override control CLOSE using control signal on Y

- With signal voltage range 0 – 10 V DC: CLOSE is activated if q_{vmin} = 0 and the control signal on Y < 0.5 V DC
- With signal voltage range 2 – 10V DC: CLOSE is activated if the control signal is Y < 0.8V $_{(*1)}$ DC

$_{(*1)}$ 0.8 V = factory setting

Override control for diagnosis

- For test purposes, override control can also be activated with the service tools (adjustment device, PC software)

Priority of the various setting options

- High priority: Default value setting using the service connector (adjustment device, PC software) for test purposes
- Low priority: Default value setting using the Y signal input on the controller

Characteristic of the setpoint value signal

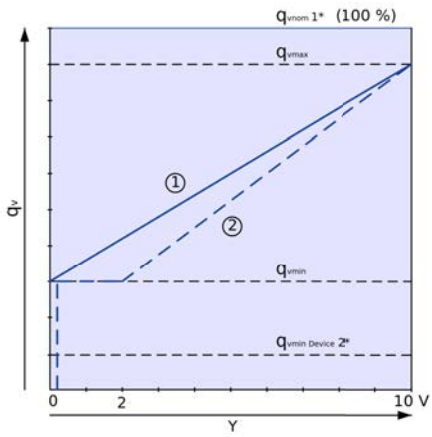

① Signal voltage range 0 – 10 V
② Signal voltage range 2 – 10 V
1* = q_{vnom} Nominal volume flow rate
2* = $q_{vmin\ Device}$ Minimum adjustable volume flow rate

Characteristic of the actual value signal

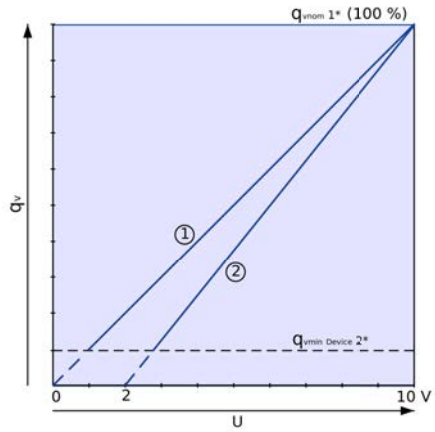

① Signal voltage range 0 – 10 V
② Signal voltage range 2 – 10 V
1* = q_{vnom} Nominal volume flow rate
2* = $q_{vmin\ Device}$ Minimum adjustable volume flow rate

Calculation of volume flow rate setpoint value at 0 – 10 V

$$q_{vset} = \frac{Y}{10\ V} \times (q_{vmax} - q_{vmin}) + q_{vmin}$$

Calculation of volume flow rate actual value at 0 – 10 V

$$q_{vact} = \frac{U}{10\ V} \times q_{vnom}$$

Calculation of nominal volume flow at 2 – 10 V

$$q_{vset} = \frac{Y - 2\ V}{(10\ V - 2\ V)} \times (q_{vmax} - q_{vmin}) + q_{vmin}$$

Calculation of actual volume flow at 2 – 10 V

$$q_{vact} = \frac{U - 2}{10\ V - 2\ V} \times q_{vnom}$$

Commissioning

- On-site adjusting is not required
- As the volume flow rates are factory set, the terminal units have to be installed at the specified locations
- After successful installation and wiring, the controller is ready for use
- Comply with the volume flow rate control ranges of the VAV terminal units, do not set a volume flow rate which is below the minimum flow rate

Connecting cable core identification for 227V-024-15-DS3 (for TVR, TVJ, TVT, TZ-Silenzio, TA-Silenzio, TVZ, TVA, TVM)

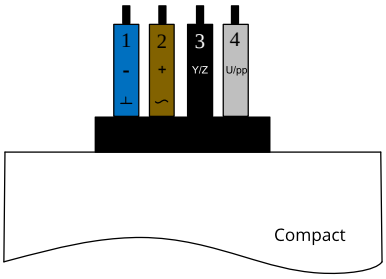

1: BU, ⊥, –: Ground, neutral
2: BN, ~, +: Supply voltage 24 V
3: BK, Y/Z: Setpoint value signal Y and override control
4: GY, U/pp: Actual value signal for service tool

Variable volume flow control and override control

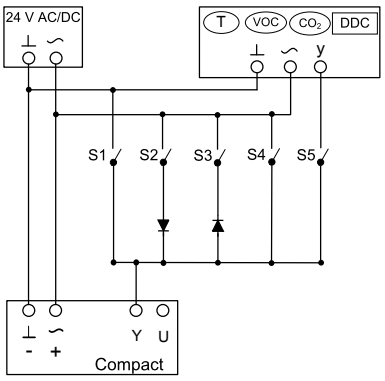

Switch functions:
S1 Damper blade CLOSED if V_{min} = 0
S2 Damper blade OPEN (only with supply voltage 24 V AC)
S3 Damper blade CLOSED (only with supply voltage 24 V AC)
S4 Maximum volume flow rate q_{vmax}
S5 Room temperature control

All switches OPEN: Minimum volume flow rate q_{vmin}

T, VOC, CO2, DDC = Setpoint value setting
When combining several override controls, the switches must be interlocked to prevent short circuits.
Diode: e.g. 1N 4007

Nomenclature

q_{vNom} [cfm]
Nominal flow rate (100 %): The value depends on product type, nominal size and control component (attachment). Values are published on the internet and in technical leaflets and stored in the Easy Product Finder design program. Reference value for calculating percentages (e.g. q_{vmax}). Upper limit of the setting range and maximum volume flow rate setpoint value for the VAV terminal unit.

$q_{vmin\ Unit}$ [cfm]
Technically possible minimum volume flow rate: The value depends on product type, nominal size and control component (attachment). Values are stored in the Easy Product Finder design program. Lower limit of the setting range and minimum volume flow rate setpoint value for the VAV terminal unit. Setpoint values below $q_{vmin\ unit}$ (if q_{vmin} equals zero) may result in unstable control or shut-off.

q_{vmax} [cfm]
Upper limit of the operating range for the VAV terminal unit that can be set by customers: q_{vmax} can be set to less than or equal to q_{vnom} For analogue signalling to volume flow controllers (typically used), the maximum value of the setpoint signal (10 V) is assigned the set maximum value (q_{vmax}) (see characteristic).

q_{vmin} [cfm]
Lower limit of the operating range for the VAV terminal unit that can be set by customers: q_{vmin} should be set to less than or equal to q_{vmax} . Do not set q_{vmin} to less than $q_{vmin\ unit}$ as the control may become unstable or the damper blade may close. q_{vmin} may equal zero. In case of analogue signalling to volume flow controllers (which are typically used), the set minimum value (q_{vmin}) is allocated to the minimum setpoint signal (0 or 2 V) (see characteristic).

q_v [cfm] Volume flow rate

VAV terminal unit
Consists of a basic unit with an attached control component.

Basic unit
Unit for controlling a volume flow without an attached control component. The main components include the casing with sensor(s) to measure the effective pressure and the damper blade to restrict the volume flow. The basic unit is also referred to as a VAV terminal unit. Important distinguishing features: Geometry or unit shape, material and types of connection, acoustic characteristics (e.g. acoustic cladding or integral sound attenuator), volume flow rate range.

Control component
Electronic unit(s) mounted on the basic unit to control the volume flow rate or the duct pressure or the room pressure by adjusting the damper blade position. The electronic unit consists basically of a controller with effective pressure transducer (integral or external) and an integral actuator (Easy and Compact controllers) or external actuator (Universal or LABCONTROL controllers). Important distinguishing features: Transducer: dynamic transducer for clean air or static transducer for contaminated air. Actuator: slow-running actuator as standard, spring return actuator for safe position, or fast-running actuator. Interface: analogue interface or digital bus interface for the capturing of signals and data.