Basic information and nomenclature

VAV terminal units

- Basic information and nomenclature
- Volume flow rate ranges and quick sizing
- Acoustics and quick sizing
- Measurement of air-regenerated and case-radiated noise
- Correction values for acoustic quick sizing
- Easy Product Finder (EPF)

Basic information and nomenclature 2
Volume flow rate and quick sizing 3
Statische Mindest-Druckdifferenz Δpstmin [in. w.g.] 3
Statische Mindest-Druckdifferenz Δpstmin [in. w.g.] 3
Acoustics 4
Acoustic quick sizing 7
Correction values for acoustic quick sizing 8
Easy Product Finder 9

Basic information and nomenclature

Basic unit

Unit for controlling a volume flow without an attached control component. The main components include the casing with sensor(s) to measure the effective pressure and the damper blade to restrict the volume flow. The basic unit is also referred to as a VAV terminal unit. Important distinguishing features: Geometry or unit shape, material and types of connection, acoustic characteristics (e.g. acoustic cladding option or integrated sound attenuator), volume flow rate range

Control component

Electronic unit(s) mounted on the basic device to control the volume flow rate or the duct pressure or the room pressure by adjusting the control damper position. The electronic unit essentially consists of a controller with differential pressure transducer (integrated or external) and an integrated actuator (Easy and Compact controller) or separate actuator (Universal or LABCONTROL controller).

Important distinguishing features:
Transducer
- Dynamic transducer for clean air
- Static transducer for contaminated air

Actuator
- Standard actuator, slow-running
- Spring return actuator for damper blade safety function
- Fast-running actuator

Interface technology
- Analogue interface
- Digital interface or digital bus interface for connection and tapping of signals and information

Volume flow controller

Consists of a basic unit with an attached control component.

Volume flow rate and quick sizing

Volume flow rate ranges

The volume flow rate design tables shown in the product data sheet show the usable volume flow rate ranges of the basic unit in combination with the electronic control components.
Each basic unit offers a certain volume flow rate range due to its aerodynamic properties. Due to the installed component properties and in particular the differential pressure transducer technology used, each control component enables complete or limited utilisation of the volume flow rate range of the basic unit.
Both the basic unit and the selected control component are therefore decisive for the selection of a volume flow controller and the required volume flow rate control range. The quick sizing therefore shows the volume flow rate ranges for the basic unit type in combination with various control components (TROX attachments).

Static minimum differential pressure Δ_{pstmin} [in. w.g.]

The static minimum differential pressure is equal to the pressure loss of the VAV terminal unit when the damper blade is open, caused by flow resistance (sensor tubes, blade mechanism). If the differential pressure on the VAV terminal unit is too low, the setpoint volume flow rate may not be achieved, not even when the damper blade is completely open. The static minimum differential pressure is an important factor in designing the ductwork as well as for sizing the fan including speed control, and is therefore a component of the quick sizing for the volume flow rate ranges. Sufficient static differential pressure must be ensured for all operating conditions and for all terminal units, and the measurement point or points for speed control must have been selected accordingly to achieve this.

Static differential pressure

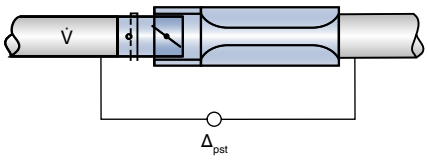

.

Acoustics

Air-regenerated noise

The noise generated at the installations (damper blade, sensor tubes, etc.) propagates **in the ducting** as air-regenerated noise and reaches the rooms to be ventilated through air terminal devices. The level reduction due to the ducting and its installations – such as changes of direction and junctions as well as end reflection and room attenuation – can be taken into account in the acoustic calculation and thus contributes to the reduction of the required attenuation by sound attenuators.

Case-radiated noise

The noise generated at the installations (damper blade, sensor tubes, etc.) penetrates **through the enclosure wall** into the adjacent surroundings and thus, depending on the installation location, also into the rooms to be ventilated. Consideration of the level reduction through ceiling insulation and room attenuation can also positively influence the result of the acoustic calculation.

Definition of noise

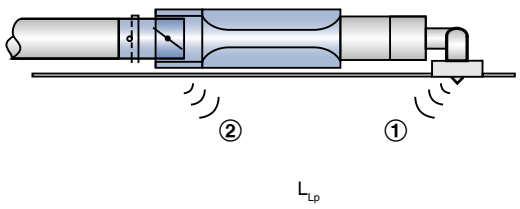

① Air-regenerated noise
② Case-radiated noise

.

Measurements

The acoustic data for the air-regenerated noise and case-radiated noise are determined according to EN ISO 5135. All measurements are carried out to EN ISO 3741 in a reverberation chamber.

Technical laboratory investigation of case-radiated noise and air-regenerated noise of the products for representation in the product data sheets

Measuring the case-radiated noise

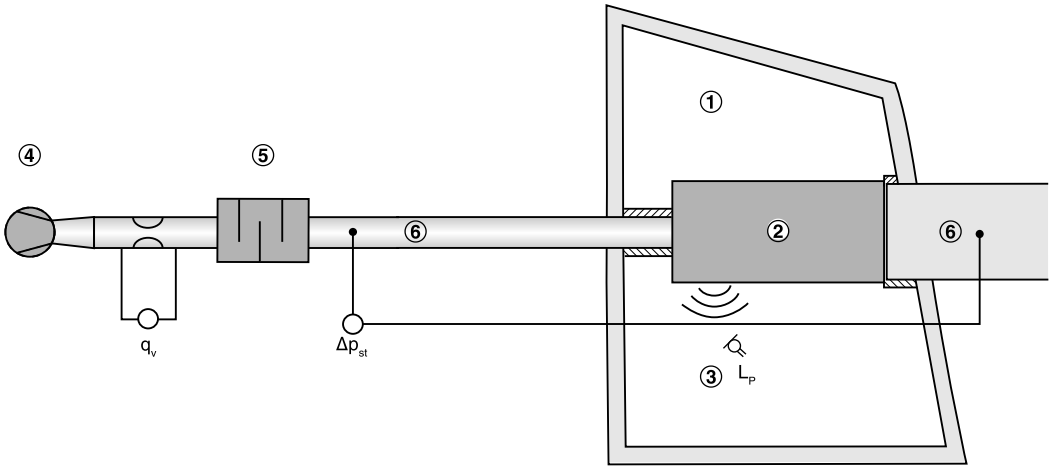

① Reverberation chamber
② Terminal unit
③ Microphone (recording case-radiated noise of VAV terminal unit)
④ Fan
⑤ Sound attenuator
⑥ Duct

Measuring the air-regenerated noise

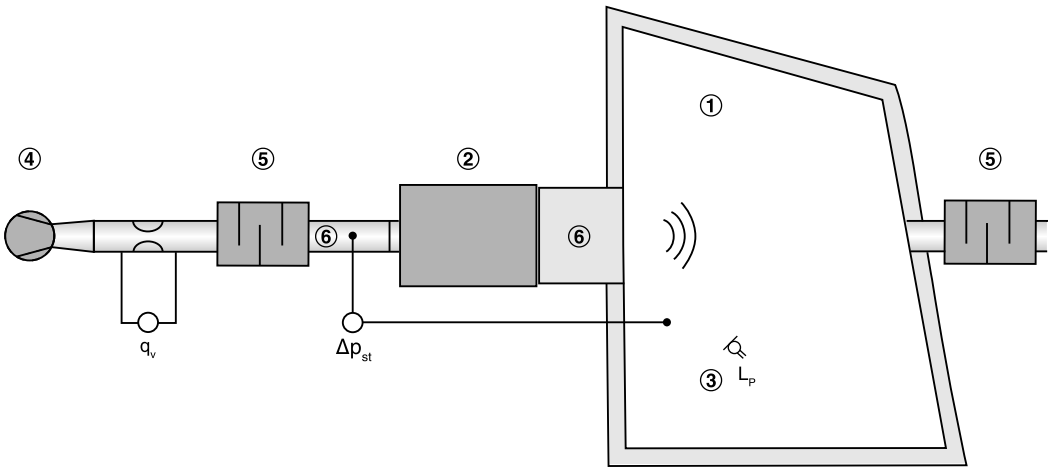

① Reverberation chamber
② Terminal unit
③ Microphone (recording air-regenerated noise of VAV terminal unit)
④ Fan
⑤ Sound attenuator
⑥ Duct

Acoustic quick sizing

Fundamentals as explanation

The quick sizing tables in the product data sheets show the sound pressure levels that can be expected in a room both for the air-regenerated noise and for the case-radiated noise. The sound pressure level in a room results from the sound power level of the products – for a given volume flow rate and differential pressure – as well as the attenuation and insulation on site.

Sound pressure level reduction for air-regenerated noise and case-radiated noise

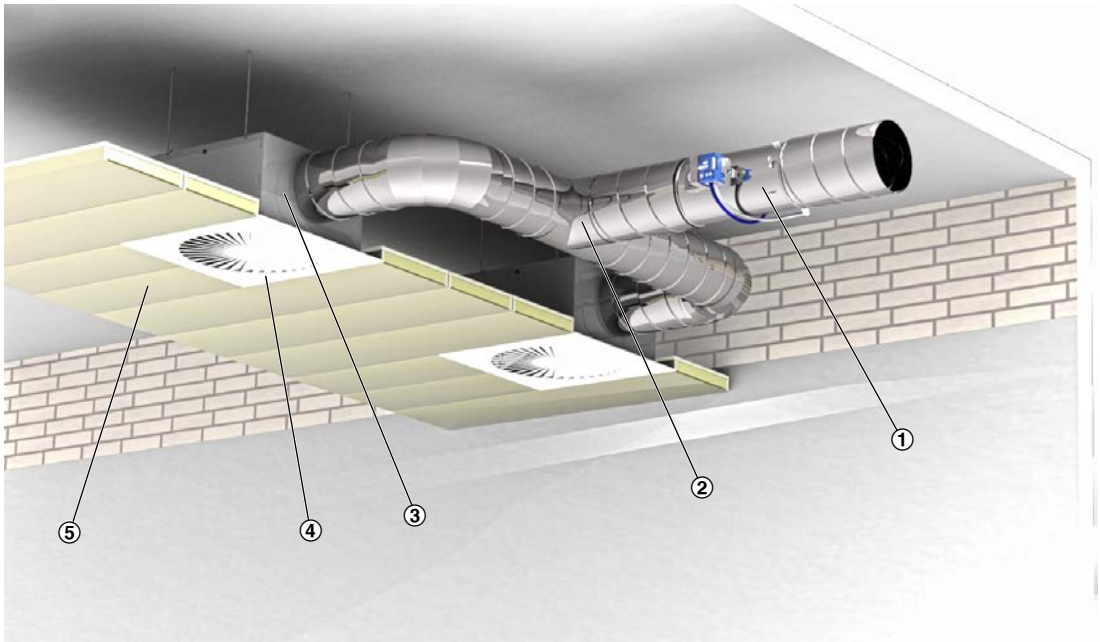

① Terminal unit
② Distribution in the ducting
③ Change of direction
④ End reflection
⑤ Ceiling insulation (only relevant for case-radiated noise)
⑥ Room attenuation

Note: The room attenuation depends on the room size/volume and the room furnishings (surfaces, floors, walls, ceilings).

System attenuation

System attenuation means all level-reducing influences – including the "natural" attenuation of ducting components and sound propagation in rooms or outdoors. In our product data sheets, practical attenuation and insulation values have already been taken into account as what are referred to as system attenuation in the acoustic quick sizing tables for the specified sound pressure levels. The system attenuation for air-regenerated noise is composed of the distribution in the ducting, the change of direction, the end reflection and the room attenuation, and thus influences the sound pressure level of the air-regenerated noise. The system attenuation for case-radiated noise is composed of ceiling insulation and room attenuation and thus influences the sound pressure level of the case-radiated noise.

Correction values for acoustic quick sizing

The (correction) tables contain practical values for the influencing variables of the possible level reduction:

- Relevant for air-regenerated noise: ventilation and air conditioning system elements, end reflection and room attenuation
- Relevant for case-radiated noise: ceiling insulation and room attenuation

Correction values for the distribution in the ducting

The correction for the distribution in the ducting is based on the number of air terminal devices assigned to any one volume flow controller. If there is just one air terminal device (assumption: 296.64 cfm), no correction is necessary. At higher volume flows, several air terminal devices are typically used which lead to an additional reduction in the air-regenerated noise.

Considered reduction of air-regenerated noise through distribution in the ducting

Additional level reduction per octave

qv [m³/h]	500	1000	1500	2000	2500	3000	4000	5000
qv [cfm]	296.64	593.29	889.93	1165.38	1482.22	1778.86	2330.75	2966.41
Number of diffusers	1	2	3	4	5	6	8	10
ΔL [dB]	0	3	5	6	7	8	9	10

Considered reduction of air-regenerated noise through change of direction, end reflection, room attenuation

Additional level reduction per octave according to VDI 2081

Centre frequency fm [Hz]	63	125	250	500	1000	2000	4000	8000
Change of direction ΔL [dB]	0	0	1	2	3	3	3	3
End reflection ΔL [dB] *	10	5	2	0	0	0	0	0
Room attenuation ΔL [dB]	5	5	5	5	5	5	5	5

One change of direction, e.g. at the horizontal connection of the diffuser plenum box, has been taken into consideration for the system attenuation values. Vertical connection of the plenum box does not result in a system attenuation. Additional bends result in lower sound pressure levels.

* The calculation is based on an assumed end reflection for nominal size 10.

Considered reduction of the case-radiated noise

Additional ceiling insulation and room attenuation values per octave according to VDI 2081

Centre frequency fm [Hz]	63	125	250	500	1000	2000	4000	8000
Ceiling insulation ΔL [dB]	4	4	4	4	4	4	4	4
Room attenuation ΔL [dB]	5	5	5	5	5	5	5	5

Note on the correction values for ceiling insulation and room attenuation

These correction values take into account the design/equipment of the room under consideration. The real attenuation values of the room and its furnishings can be higher or lower depending on the design (carpets, parquet, wall composition, curtains, etc.). We consider an average (usual) value of 5 dB in the acoustic quick sizing.

Easy Product Finder

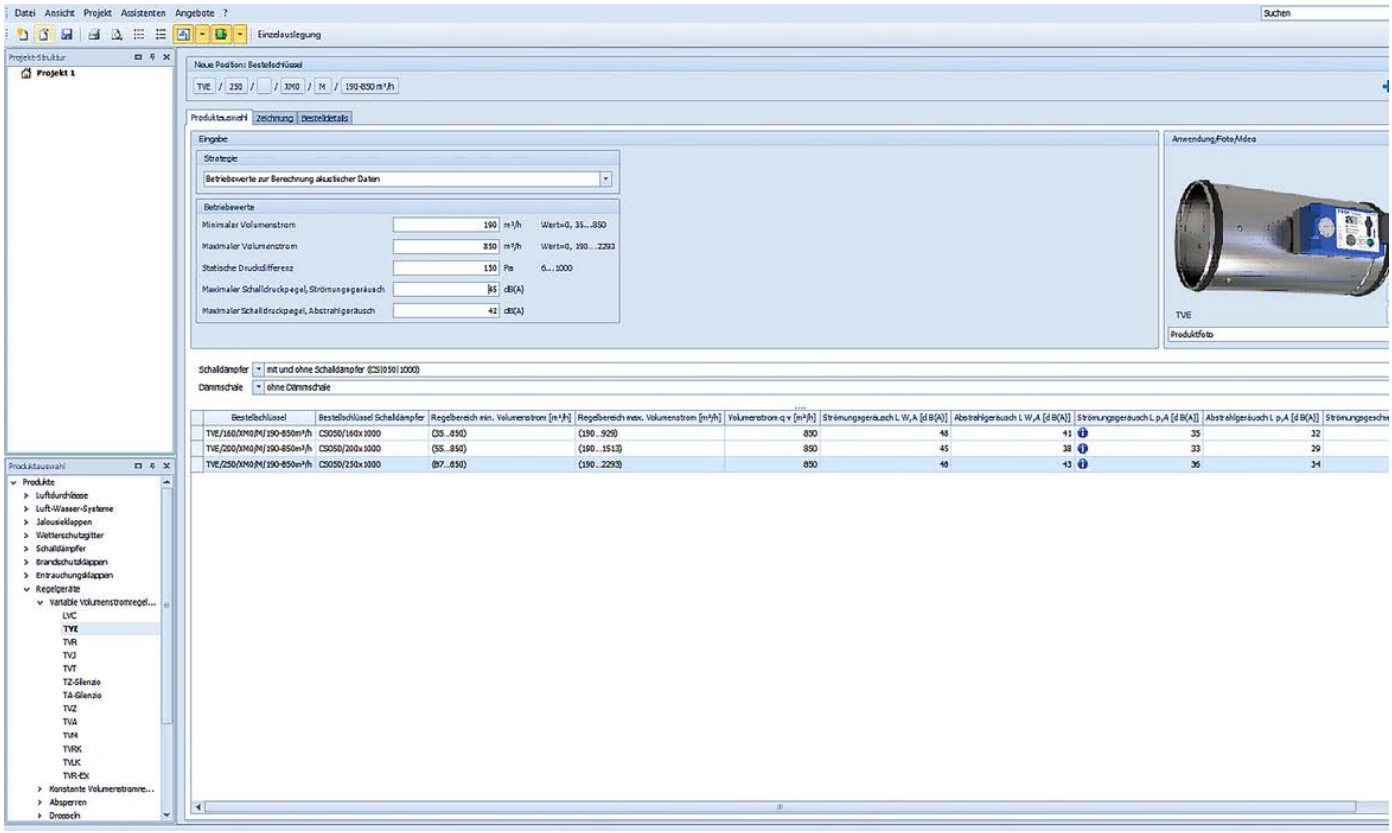

The Easy Product Finder allows you to size products using your project-specific data. Data on individually selectable operating points (e.g. volume flow rates, differential pressures and acoustics) can be calculated.

Click here for the Easy Product Finder:

www.trox.de/epf