VAV terminal unit

Type TVR-Ex

with control components:
TE*, S1*, P*5

TVR-Ex with electronic control

II 2G c II TX
II 2D c II T 80 °C

TVR-Ex with pneumatic control

II 2G c IIB TX

Read the instructions prior to performing any task!

TROX® TECHNIK
The art of handling air

CE

TROX GmbH
Heinrich-Trox-Platz
47504 Neukirchen-Vluyn
Germany
Telephone: +49 (0) 2845 202-0
Fax: +49 (0) 2845 202-265
E-mail: trox@trox.de
Internet: www.troxtechnik.com

A00000032577, 3, GB/en
04/2018

© TROX GmbH 2015

General information

About this manual

This operating and installation manual enables operating or service personnel to use the VAV terminal unit Type TVR-Ex safely and efficiently.

The manual must be kept in a place that is accessible at all times.

Personnel who intend to work on the VAV terminal unit must read and fully understand this manual before starting any work. The basic prerequisite for safe working is to comply with the safety notes and all instructions in this manual.

The local regulations for health and safety at work and the general safety regulations for the area of application of VAV terminal unit also apply.

Illustrations in this manual are mainly for information and may differ from the actual design.

This installation and operating manual describes the VAV terminal unit TVR-Ex with the following control components:

- TE* – Electronic control with external controller TCU3/ELAB
  - TES – Controller, pressure transducer and actuator
  - TEF – Controller, pressure transducer and spring return actuator
  - TEX – Controller, pressure transducer and actuator with auxiliary switch
  - TEY – Controller, pressure transducer and spring return actuator with auxiliary switch
- S1* – Integral electronic control (in the TVR-Ex casing)
  - S1S – Universal controller, pressure transducer and actuator
  - S1F – Universal controller, pressure transducer and spring return actuator
  - S1X – Universal controller, pressure transducer and actuator with auxiliary switch
  - S1Y – Universal controller, pressure transducer and spring return actuator with auxiliary switch
- P*5 – Integral pneumatic control (in the TVR-Ex casing)
  - PG5 – Volume flow controller with actuator
  - PJ5 – Pressure and volume flow cascade (±0.08 in. w.g.)
  - PL5 – Pressure and volume flow cascade (±0.2 in. w.g.)

Other applicable documentation

In addition to these instructions, the following documents apply:

- Installation manuals for expansion modules (TROX, only for control component TE*)
- Project-specific wiring documents (only for control component TE*)
- Instructions for the electronic control components (made by Schischek, only for control component S1*)
  - Differential pressure transducer ExCos-P500
  - Volume flow controller ExReg-V300-A
  - Explosion-proof actuators ExMax-5.10Y/CF and YF/CYF
  - Terminal box ExBox-Y/S-SW
  - Terminal box ExBox-SW (required if an auxiliary switch is used)
  - Auxiliary switch ExSwitch (optional)
- Instructions for the pneumatic control components (made by Sauter, only for control component P*5)
  - Pneumatic controller RLP 100 F003 or F901/F915
  - Pneumatic actuator AK31/41

Copyright

This document, including all illustrations, is protected by copyright and pertains only to the corresponding product.

Any use without our consent may be an infringement of copyright, and the violator will be held liable for any damage.

This applies in particular to:

- Publishing content
- Copying content
- Translating content
- Microcopying content
- Saving content to electronic systems and editing it

TROX Technical Service

To ensure that your request is processed as quickly as possible, please keep the following information ready:

- Delivery date of the TROX components and systems
- TROX order number
- Product name
- Brief description of the fault

Online	www.troxtechnik.com
Phone	+49 2845 202-400

Limitation of liability

The information in this manual has been compiled with reference to the applicable standards and guidelines, the state of the art, and our expertise and experience of many years.

The manufacturer does not accept any liability for damages resulting from:

- Non-compliance with this manual
- Incorrect use
- Operation or handling by untrained individuals
- Unauthorised modifications
- Technical changes
- Use of non-approved replacement parts

The actual scope of delivery may differ from the information in this manual for bespoke constructions, additional order options or as a result of recent technical changes.

The obligations agreed in the order, the general terms and conditions, the manufacturer's terms of delivery, and the legal regulations in effect at the time the contract is signed shall apply.

We reserve the right to make technical changes.

Defects liability

For details regarding defects liability please refer to Section VI, Warranty Claims, of the Delivery and Payment Terms of TROX GmbH.

The Delivery and Payment Terms of TROX GmbH are available at *www.troxtechnik.com*.

Safety notes

Symbols are used in this manual to alert readers to areas of potential hazard. Signal words express the degree of the hazard.

DANGER!

Imminently hazardous situation which, if not avoided, will result in death or serious injury.

WARNING!

Potentially hazardous situation which, if not avoided, could result in death or serious injury.

CAUTION!

Potentially hazardous situation which, if not avoided, may result in minor or moderate injury.

NOTICE!

Potentially hazardous situation which, if not avoided, may result in property damage.

ENVIRONMENT!

Environmental pollution hazard.

Tips and recommendations

Useful tips and recommendations as well as information for efficient and fault-free operation.

Safety notes as part of instructions

Safety notes may refer to individual instructions. In this case, safety notes will be included in the instructions and hence facilitate following the instructions. The above listed signal words will be used.

Example:

1. ▸ Untighten the screw.
2. ▸ **⚠ CAUTION!**

   Danger of finger entrapment when closing the lid.

   Be careful when closing the lid.
3. ▸ Tighten the screw.

Specific safety notes

The following symbols are used in safety notes to alert you to specific hazards:

Warning signs	Type of danger
⚠	Warning – high-voltage.
⚠ EX	Warning – explosive atmosphere.
⚠	Warning – danger zone.

Table of contents

1 Safety **7**
1.1 Correct use..... 7
1.2 Safety signs..... 8
1.3 Safeguards..... 8
1.4 Residual risks..... 8
1.4.1 Electric shock hazards..... 8
1.5 System owner's responsibility..... 8
1.6 Personnel..... 9
1.6.1 Qualified staff..... 9
1.6.2 Unauthorised persons..... 10
1.7 Personal protective equipment..... 10
1.8 General safety measures..... 10
1.9 Repair and replacement parts..... 10

2 Product description..... **11**
2.1 System description..... 11
2.2 TVR-Ex with electronic control..... 11
2.2.1 Control component TE*..... 11
2.2.2 Control component S1*..... 12
2.3 TVR-Ex with pneumatic control..... 13
2.3.1 Control component P*5..... 14

3 Operation..... **16**
3.1 General..... 16
3.1.1 Opening the casing..... 16
3.1.2 Closing the casing..... 16
3.1.3 Zero point correction (only with control components TE* and S1*)..... 17

4 Technical data..... **18**
4.1 Product overview and dimensions..... 18
4.2 TVR-Ex with electronic control..... 19
4.2.1 Control component TE*..... 19
4.2.2 Control component S1*..... 22
4.3 TVR-Ex with pneumatic control..... 23
4.3.1 Control component P*5..... 23

5 Transport, storage and packaging..... **24**
5.1 Delivery check..... 24
5.2 Transport on site..... 24
5.3 Storage..... 24
5.4 Packaging..... 24

6 Installation..... **25**
6.1 Safety..... 25
6.2 VAV terminal unit..... 25
6.2.1 Electronic controller TCU3 (control component TE*)..... 26

7 Wiring..... **28**
7.1 Installation information..... 28
7.1.1 Installation according to ATEX..... 28
7.2 Wiring of TVR-Ex with control component TE*..... 28
7.2.1 Connecting the electronic controller TCU3 29
7.2.2 Wiring of control component TE*..... 33
7.3 Wiring of TVR-Ex with control component S1*..... 35
7.3.1 Terminal connections for control component S1*..... 35

8 Pneumatic connection..... **37**
8.1 Pneumatic control (control component P*5)..... 37
8.1.1 Installation information..... 37
8.1.2 Tubing..... 37

9 Commissioning and operation..... **39**
9.1 Testing before commissioning..... 39
9.2 Commissioning control component TE*.... 39
9.2.1 Connection setup, PC and TCU3..... 39
9.3 Commissioning control component S1*.... 40
9.4 Commissioning pneumatic controllers (control component P*5)..... 40
9.5 Operation..... 40

10 Maintenance..... **41**
10.1 Inspection..... 41
10.1.1 Inspection work..... 41
10.2 Repair..... 41
10.3 Maintenance service..... 41

11 Troubleshooting..... **43**
11.1 Electronic control - troubleshooting..... 43
11.2 Pneumatic control - troubleshooting..... 43

12 Disassembly and disposal..... **44**
12.1 Removing VAV terminal unit TVR-Ex..... 44
12.2 Removing the electronic controller TCU3..... 44
12.3 Disposal..... 44

13 Declaration of conformity..... **45**

14 Index..... **48**

1 Safety

Safety notes

Symbols are used in this manual to alert readers to areas of potential hazard. Signal words express the degree of the hazard.

Comply with all safety instructions and proceed carefully to avoid accidents, injuries and damage to property.

DANGER!

Imminently hazardous situation which, if not avoided, will result in death or serious injury.

WARNING!

Potentially hazardous situation which, if not avoided, may result in death or serious injury.

CAUTION!

Potentially hazardous situation which, if not avoided, may result in minor or moderate injury.

NOTICE!

Potentially hazardous situation which, if not avoided, may result in property damage.

ENVIRONMENT!

Environmental pollution hazard.

1.1 Correct use

VAV terminal unit TVR-Ex

The VAV terminal unit of Type TVR-Ex is intended for the control of variable volume flows and room pressures in ventilation and air conditioning systems in areas with potentially explosive atmospheres.

It is suitable for controlling dust-free air, gases, mists and vapours in accordance with the ATEX classification specified on the unit.

The VAV terminal unit may also be used in explosive atmospheres caused by dust (only with electronic control).

The VAV terminal unit must not be used for dust-laden atmospheres since dust contaminates the differential pressure transducers.

Even if the VAV terminal unit is used in areas with potentially explosive atmospheres caused by dust, dust deposits of more than 0.2 in on the casing must be avoided.

Electronic controller TCU3 (control component TE*)

The electronic controller TCU3 complements VAV terminal units of Type TVR-Ex with control component TE* for the fast control of variable volume flows.

It is typically used in a group of several controllers for complete room control, but it may also be used as a single controller.

The electronic controller TCU3 must be installed and used outside of areas with potentially explosive atmospheres.

Incorrect use

WARNING!

Danger of injury or risk of damage to property due to incorrect use!

Incorrect use of the VAV terminal unit can lead to dangerous situations.

Do not use the VAV terminal unit:

- in areas with potentially explosive atmospheres for which the product has not been approved
- for the volume flow rate control of dust-laden air
- for the volume flow rate control of aggressive gases
- in ventilation systems in which high levels of dust and pollution, extreme humidity, or chemical contamination may impair the function of the unit
- outdoors without sufficient protection against the effects of weather
- in wet areas
- for areas of application that are not described in this manual

Modifying the unit or using replacement parts that have not been approved by TROX is not permitted.

1.2 Safety signs

The following symbols and signs are usually found in the work area. They apply to the very location where they are found.

WARNING!

Danger due to illegible signage!

Over time, stickers and signs may fade or become otherwise illegible, meaning that hazards cannot be identified and necessary operating instructions cannot be followed. There is then a risk of injury.

- Ensure that all of the safety, warning and operating information is clearly legible.
- Replace illegible signs or stickers immediately.

Earthing

This symbol marks all equipotential bonding connection points on the unit.

Electrical voltage

Only skilled qualified electricians are allowed to work in areas marked as having electrical voltage.

Unauthorised persons must not enter areas, open cabinets or work on components where an electrical voltage is present and which are hence marked with this symbol.

1.3 Safeguards

TVR-Ex casing

The casing protects the VAV terminal unit from environmental effects. The casing has to be intact, with the cover in place during operation.

Equipotential bonding

TVR-Ex must be connected to the earth bar by a qualified electrician. Equipotential bonding prevents electrostatic ignition hazards.

1.4 Residual risks

TVR-Ex is a state-of-the-art product and meets current safety requirements. Residual risks cannot be excluded, however, and you should proceed with caution. This section describes the residual risks that have been identified in a risk assessment.

Always observe the safety notes provided in the following chapters of this manual to reduce health hazards and prevent any hazardous situations.

1.4.1 Electric shock hazards

Electric current

DANGER!

Danger of death due to electric current!

Danger of electric shock! Do not touch any live components! Damaged insulation or damaged parts are a life threatening hazard.

- Have work on the electrical system carried out only by skilled qualified electricians.
- If the insulation is damaged, disconnect the power supply immediately and have the insulation repaired.
- Before you start working on electric systems and equipment, switch off the supply voltage and secure it against being switched on accidentally. Comply with the following safety rules:
  - Switch off the power supply.
  - Secure it against being switched on accidentally.
  - Ensure that no voltage is present.
  - Connect to the earth; short circuit connection.
- Do not bypass or disable any fuses. Be sure to maintain the correct current rating when you replace fuses.
- Ensure that live parts do not come into contact with moisture. Moisture can cause a short circuit.

1.5 System owner's responsibility

System owner

The system owner is a natural or legal person who for commercial or business purposes owns or manages the ventilation system or component or allows third parties to use or operate it, but continues to bear legal responsibility for the safety of users, staff or third parties while the product is in use.

System owner's obligations

The unit is intended for commercial use. The system owner is therefore subject to the legal obligations of occupational health and safety regulations.

In addition to the safety notes in this manual, the applicable regulations for safety, accident prevention and environmental protection must also be complied with.

In particular:

- The system owner must be aware of the applicable occupational health and safety regulations and carry out a risk assessment to determine any additional hazards that may exist or result from the specific working conditions at the installation location. The system owner has to create operating instructions for the unit that reflect the results of this risk assessment.
- The system owner has to ensure, throughout the entire operating period of the unit, that these operating instructions conform to applicable standards and guidelines; in case of any deviation, the system owner has to adapt the instructions.
- The system owner must secure the unit to prevent access by unauthorised individuals.
- The system owner must clearly define the responsibilities for operation, maintenance, cleaning, troubleshooting and removal.
- The system owner has to ensure that all individuals who handle or use the unit have read and understood this manual.
- The system owner must regularly provide training for the personnel and inform them of any dangers.
- The system owner must provide the employees with the required personal protective equipment.
- The system owner must ensure that the maintenance intervals specified in this manual are observed.
- The system owner must have all safeguards tested regularly to ensure that they are functional and complete.
- The system owner must observe the local fire regulations.

Hygiene requirements

The system owner has to comply with the local regulations and harmonised standards for hygiene requirements. This includes regular maintenance and inspection intervals.

1.6 Personnel

1.6.1 Qualified staff

Qualification

The work described in this manual has to be carried out by individuals with the qualification, training, knowledge and experience described below:

HVAC technician
HVAC technicians are individuals who have sufficient professional or technical training in the field they are working in to enable them to carry out their assigned duties at the level of responsibility allocated to them and in compliance with the relevant guidelines, safety regulations and instructions. HVAC technicians are individuals who have in-depth knowledge and skills related to HVAC systems; they are also responsible for the professional completion of the work under consideration.

HVAC technicians are individuals who have sufficient professional or technical training, knowledge and actual experience to enable them to work on HVAC systems, understand any potential hazards related to the work under consideration, and recognise and avoid any risks involved.

Skilled qualified electrician
Skilled qualified electricians are individuals who have sufficient professional or technical training, knowledge and actual experience to enable them to work on electrical systems, understand any potential hazards related to the work under consideration, and recognise and avoid any risks involved.

⚠ DANGER!

Risk to life in area with potentially explosive atmospheres

The system owner may require that work in areas with potentially explosive atmospheres is carried out by individuals with additional qualifications. Any work requires that the system owner has been informed and agreed to it.

Any work has to be carried out by individuals who can be expected to carry out their assigned duties reliably. Individuals whose reaction time is delayed due to alcohol, drugs or other medication must not carry out any work.

Instruction

System owners must regularly instruct their personnel. The instruction procedure has to be documented for further reference.

At least the following details have to be documented:

- Date of instruction
- Names of persons being instructed
- Type of instruction
- Name of instructor
- Signature of person being instructed

1.6.2 Unauthorised persons

WARNING!

Risk to life! Unauthorised access to the hazardous area and work area must be prevented!

Unauthorised persons who do not fulfil the requirements specified here are usually not aware of the dangers in the work area. There is a risk to life and limb for unauthorised people.

- Keep unauthorised persons away from hazardous areas and work areas.
- Instruct these persons to leave the hazardous area or work area.
- Stop work while unauthorised persons are present in the hazardous area or work area.

1.7 Personal protective equipment

Personal protective equipment is equipment that protects the user against health or safety risks at work.

Personal protective equipment must be worn for various types of work; the protective equipment required is listed in this manual together with the description of each type of work.

Description of personal protective equipment

Industrial safety helmet

Industrial safety helmets protect the head from falling objects, swinging loads, and impacts with stationary objects.

Protective clothing

Protective clothing is close fitting, with low tear resistance, close fitting sleeves, and no projecting parts. It prevents entanglement in moving machinery.

Do not wear jewellery.

Protective gloves

Protective gloves are used to protect hands from friction, abrasions, punctures, or deeper injuries.

Safety shoes

Safety shoes protect the feet against crushing, falling parts, and slipping on slippery ground.

Safety goggles

Safety goggles protect the eyes from flying particles and liquid splashes.

1.8 General safety measures

Large temperature differences

Be careful when there is a large temperature difference. If the unit has been kept in an unheated area, wait for two hours before switching on the supply voltage. Condensation may damage the electronic components beyond repair. Only after about 2 hours will the system have reached room temperature.

Be careful when handling and installing expansion modules

Electrostatic charge can damage the electronics. Do not touch any components or circuits on the TCU3 main PCB or on any expansion modules such as EM-LON or EM-TRF.

Foreign matter and liquids

Be careful when objects or liquids have got into the casing, or if the unit emits a smell or smoke. Decommission the VAV terminal unit and have it checked by the manufacturer.

1.9 Repair and replacement parts

TVR-Ex is a VAV terminal unit specially developed for use in potentially explosive atmospheres. To maintain the protection function for explosive atmospheres, use only genuine TROX replacement parts for repair.

TVR-Ex must only be repaired by the manufacturer or by specialist personnel authorised by the manufacturer.

2 Product description

2.1 System description

VAV terminal units of Type TVR-Ex are suitable for volume flow control in areas with potentially explosive atmospheres.

The system consists of the VAV terminal unit and optional control components:

- TE* – Electronic control with external controller TCU3/ELAB
  - TES – Controller TCU3, pressure transducer and actuator
  - TEF – Controller TCU3, pressure transducer and spring return actuator
  - TEX – Controller TCU3, pressure transducer and actuator with auxiliary switch
  - TEY – Controller TCU3, pressure transducer and spring return actuator with auxiliary switch
- S1* – Integral electronic control (in the TVR-Ex casing)
  - S1S – Universal controller, pressure transducer and actuator
  - S1F – Universal controller, pressure transducer and spring return actuator
  - S1X – Universal controller, pressure transducer and actuator with auxiliary switch
  - S1Y – Universal controller, pressure transducer and spring return actuator with auxiliary switch
- P*5 – Integral pneumatic control (in the TVR-Ex casing)
  - PG5 – Volume flow controller with actuator
  - PJ5 – Pressure and volume flow cascade (±20 Pa)
  - PL5 – Pressure and volume flow cascade (±50 Pa)

2.2 TVR-Ex with electronic control

TVR-Ex is used for controlling airflows in areas with potentially explosive atmospheres.

For this purpose, the airflow is measured using a differential pressure sensor which measures the pressure at several points and calculates an average value. This sensor delivers exact results for most ventilation applications with normal upstream flow conditions.

The volume flow rate is controlled in a closed loop, i.e. measurement – comparison – control.

A differential pressure transducer converts the differential pressure into an electrical signal that is interpreted as an actual value by the electronic controller. The setpoint value comes from the fume cupboard control, supply or extract air control or a DDC outstation.

The controller compares the actual value with the setpoint value and alters the control signal of the damper actuator if there is a difference between the two values.

How the inputs are used depends on the project-specific control strategy.

2.2.1 Control component TE*

The VAV terminal unit is to be installed in ducts. All the attached components are explosion-proof.

The external electronic controller TCU3 is not explosion-proof. It must be installed outside the area with a potentially explosive atmosphere.

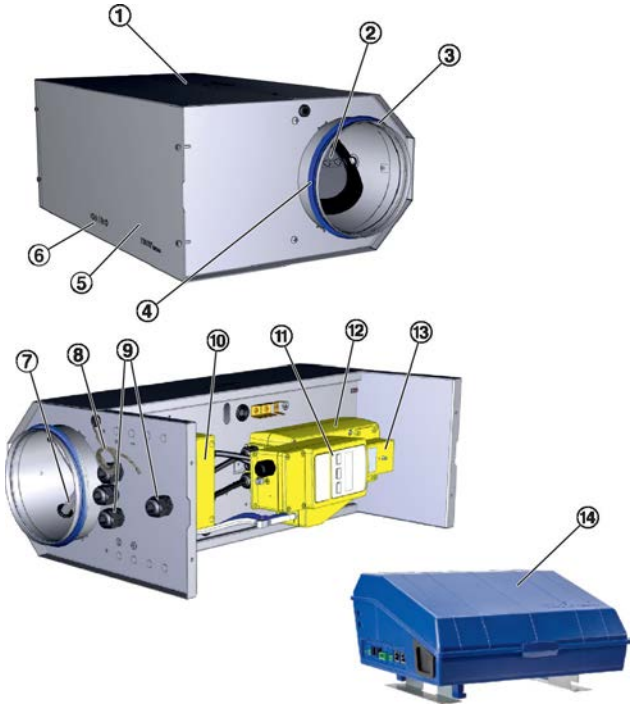

*Fig. 1: TVR-Ex TE**

① Casing
② Damper blade
③ Spigot
④ Lip seal
⑤ Cover
⑥ Arrow indicating the airflow direction
⑦ Differential pressure sensor
⑧ Equipotential bonding
⑨ Cable glands
⑩ Terminal box
⑪ Differential pressure transducer
⑫ Spring return actuator or other actuator
⑬ Auxiliary switch (optional)
⑭ Electronic controller TCU3

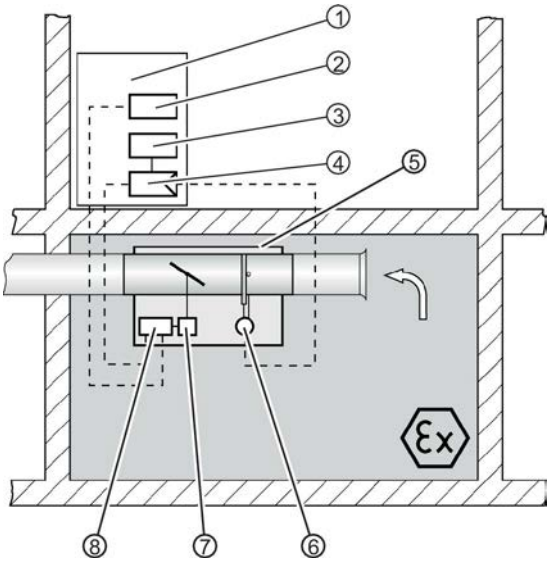

Fig. 2: Installation example

① Switch cabinet (by others)
② Supply voltage 230 VAC (by others)
③ Supply voltage 24 VAC (by others)
④ Electronic controller TCU3
⑤ TVR-Ex casing
⑥ Differential pressure transducer
⑦ Spring return actuator or other actuator
⑧ Terminal box

2.2.1.1 Commissioning tool

For commissioning, the application specific parameters have to be downloaded to the controller. Required hardware and software is available from TROX; you may also request commissioning support from our technical service.

Fig. 3: Commissioning tool

2.2.2 Control component S1*

TVR-Ex is to be installed in ducts. The electronic controller is fitted inside the TVR-Ex casing. All the attached components are explosion-proof.

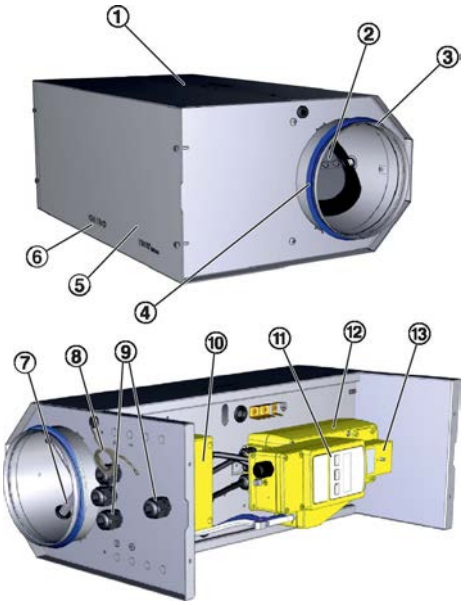

*Fig. 4: TVR-Ex S1**

① Casing
② Damper blade
③ Spigot
④ Lip seal
⑤ Cover
⑥ Arrow indicating the airflow direction
⑦ Differential pressure sensor
⑧ Equipotential bonding
⑨ Cable glands
⑩ Terminal box
⑪ Differential pressure transducer with integral electronic controller
⑫ Spring return actuator or other actuator
⑬ Auxiliary switch (optional)

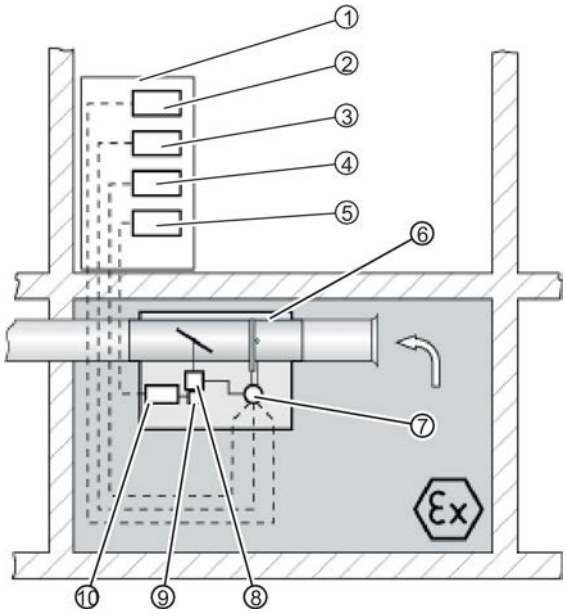

Fig. 5: Installation example

① Switch cabinet
② Supply voltage 24 VAC (by others)
③ Volume flow rate default setting (e.g. from the central BMS)
④ Volume flow rate actual value and damper blade position (optional)
⑤ Evaluation of switch contacts (only for variants with auxiliary switch)
⑥ TVR-Ex casing
⑦ Volume flow controller including differential pressure transducer
⑧ Spring return actuator or other actuator
⑨ Auxiliary switch (optional)
⑩ Terminal box (only for units with auxiliary switch)

More information

For more information on commissioning and settings refer to the product documentation for ExReg- V300 at www.schischek.de.

2.3 TVR-Ex with pneumatic control

TVR-Ex is used for controlling airflows in areas with potentially explosive atmospheres.

For this purpose, the airflow is measured using a differential pressure sensor which measures the pressure at several points and calculates an average value. This sensor delivers exact results for most ventilation applications with normal upstream flow conditions.

The volume flow rate is controlled in a closed loop, i.e. measurement – comparison – control. A differential pressure transducer converts the differential pressure into a pneumatic signal that is interpreted as an actual value by the pneumatic controller.

The setpoint value comes from the fume cupboard control, supply or extract air control or a DDC outstation (electro-pneumatically converted). The controller can also use a setpoint parameter.

The controller compares the actual value with the setpoint value and alters the control signal of the damper actuator if there is a difference between the two values.

The actual volume flow rate may be displayed by an indicator unit with a low air throughput, or it may be used for controlling the extract air by means of a cut-out relay (supplied by others).

The system consists of the VAV terminal unit with 1 or 2 pneumatic controllers, depending on the application. A pneumatic actuator acts onto the damper blade depending on the settings specified for the pneumatic controller.

2.3.1 Control component P*5

TVR-Ex is to be installed in ducts. All the attached control components are explosion-proof.

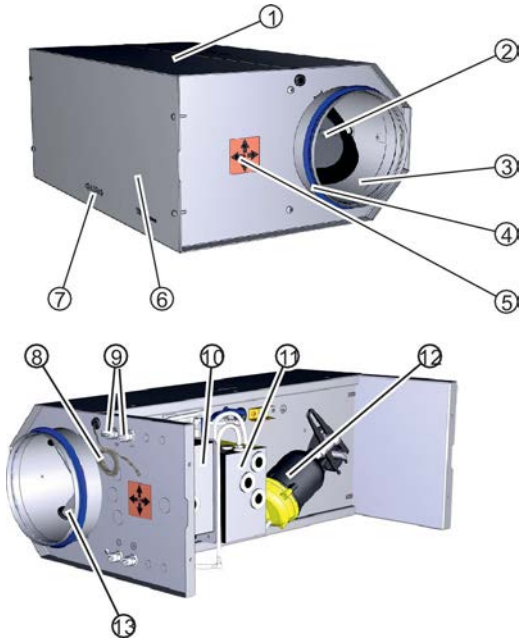

*Fig. 6: TVR-Ex P*5*

① Casing
② Damper blade
③ Spigot
④ Lip seal
⑤ Sticker showing the correct installation orientation
⑥ Cover
⑦ Arrow indicating the airflow direction
⑧ Equipotential bonding
⑨ Pneumatic connections
⑩ Pneumatic controller RLP 100 F901/915 (optional)
⑪ Pneumatic controller RLP 100 F003
⑫ Pneumatic actuator
⑬ Differential pressure sensor

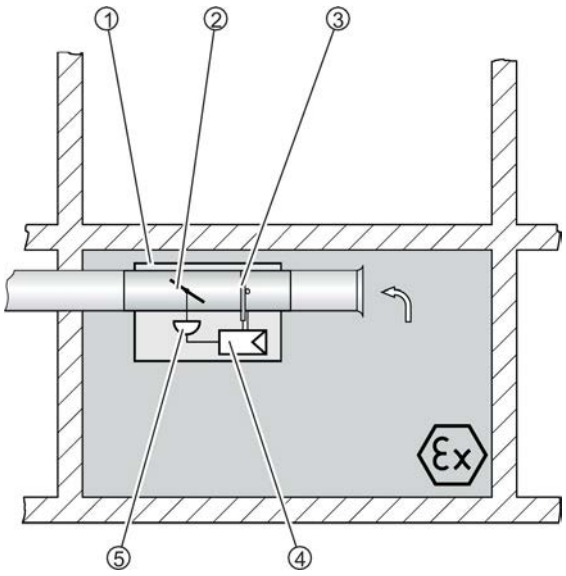

Fig. 7: Installation example

① TVR-Ex casing
② Damper blade
③ Differential pressure sensor
④ Pneumatic controller RLP100
⑤ Pneumatic actuator

2.3.1.1 Volume flow control

Depending on the project-specific control strategy, a suitable pneumatic setpoint adjuster must be provided (by others). For variable volume flow rate control, this is a room temperature controller, a setpoint value adjuster or a DDC outstation with electro-pneumatic converter. The output signal of this transducer is used as a control variable by the RLP 100 pneumatic controller.

No setpoint adjuster is required for constant volume flow rate control.

Override controls can be implemented using pneumatic switches provided by others.

The volume flow rate actual value is available as a standard linear pneumatic signal. This signal can be used to control a slave unit, for example in the extract air duct. A cut-out relay is required for this application (to be provided by others). Supply - extract tracking control is possible.

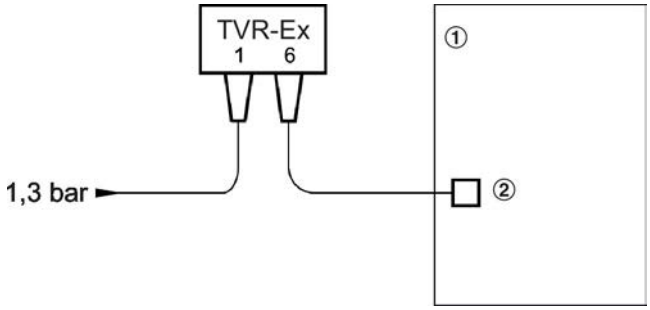

Fig. 8: Volume flow control

① Room
② Setpoint adjuster, e.g. room temperature controller

2.3.1.2 Room pressure control

The best method for controlling near airtight rooms is to have room pressure control in a cascade with volume flow control.

The room pressure controller measures and controls the differential pressure with regard to a reference room.

The volume flow rate setpoint value is influenced by the room pressure controller.

The room pressure actual value and the volume flow rate actual value are available as standard linear pneumatic signals.

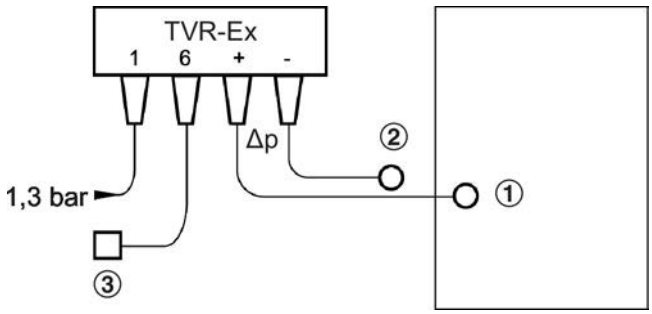

Fig. 9: Room pressure control

① Room
② Reference room
③ Setpoint adjuster

3 Operation

3.1 General

3.1.1 Opening the casing

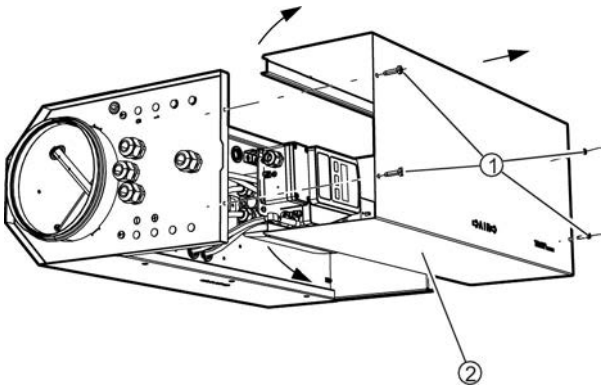

Fig. 10: Opening the casing

Proceed as follows to open the casing:

Personnel:
- HVAC technician

Protective equipment:
- Industrial safety helmet
- Protective clothing
- Protective gloves
- Safety shoes

1. Unscrew and remove 4 screws (Fig. 10/1) using a Phillips screwdriver.
2.

   ! NOTICE!

   Be careful to not damage the protective earth conductor.

   The cover of TVR-Ex is fitted with a protective earth conductor with a lockable blade receptacle connector.

   – Open the cover carefully.
   – When pulling off the protective earth conductor, release the fuse by pressing the latch mechanism.

   Press both side parts (Fig. 10/2) of the cover slightly outwards using a screwdriver.
3. Lift the cover by hand such that you can pull off the protective earth conductor.
4. Remove the protective earth conductor from the cover.
5. Remove the cover completely and put it down.

3.1.2 Closing the casing

Proceed as follows to close the casing:

Personnel:
- HVAC technician

Protective equipment:
- Industrial safety helmet
- Protective clothing
- Protective gloves
- Safety shoes

1. Attach the protective earth conductor to the cover (note which way the cover opens).
2. Slide the cover back onto the casing.
3. Fix and tighten it with 4 screws (Fig. 10/1) using a Phillips screwdriver.

3.1.3 Zero point correction (only with control components TE* and S1*)

Once installation and electrical wiring have been completed, the zero point must be corrected on the differential pressure transducer because the installation orientation has an influence on the measured value. Also, it is necessary to correct it at the prescribed maintenance intervals.

Before correcting the zero point, connect the differential pressure transducer to the supply voltage for about 15 minutes in order to achieve an even operating temperature.

To correct the zero point, proceed as follows:

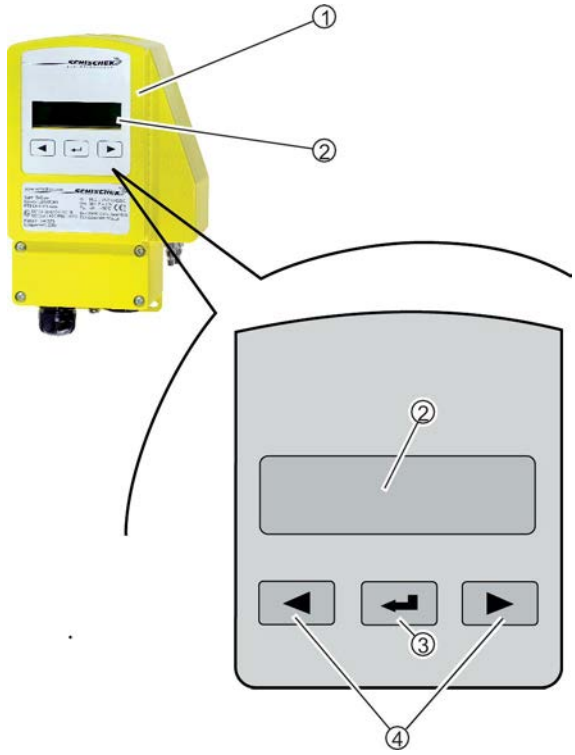

Fig. 11: Differential pressure transducer

① Differential pressure transducer
② Display
③ Enter key
④ Arrow keys

1. Pull the differential pressure sensor tubes off the differential pressure transducer.
2. Use a tube of approx. 7.87 in. to connect the pres-sure connections P+ and P- on the differential pressure transducer.
3. On the control panel of the differential pressure transducer keep the Enter key pressed for more than 3 seconds in order to change to parameter mode.
4. If you have a password, enter the password and confirm it by pressing the Enter key.
5. Use the arrow keys to select the '0-point correction' menu item (TE* = menu item 18, S1* = sub menu item 3.2 in menu 3) and the Enter key to confirm your selection.
6. Use the arrow keys to select 'Yes', then start the correction procedure with the Enter key.
7. After completing correction, go to the 'Save' menu in order to exit parameter mode. Select 'Save data' and confirm your selection by pressing the Enter key; the sensor is then in operating mode again. A blinking star on the display indicates signal acquisition in operating mode.
8. Push the differential pressure sensor tubes back on.

Tube colour	Connection of differential pressure transducer
Transparent	Plus
Blue	Minus

More information

For more information on commissioning and settings refer to the product documentation for ExReg- V300 at www.schischek.de.

4 Technical data

4.1 Product overview and dimensions

VAV terminal unit TVR-Ex

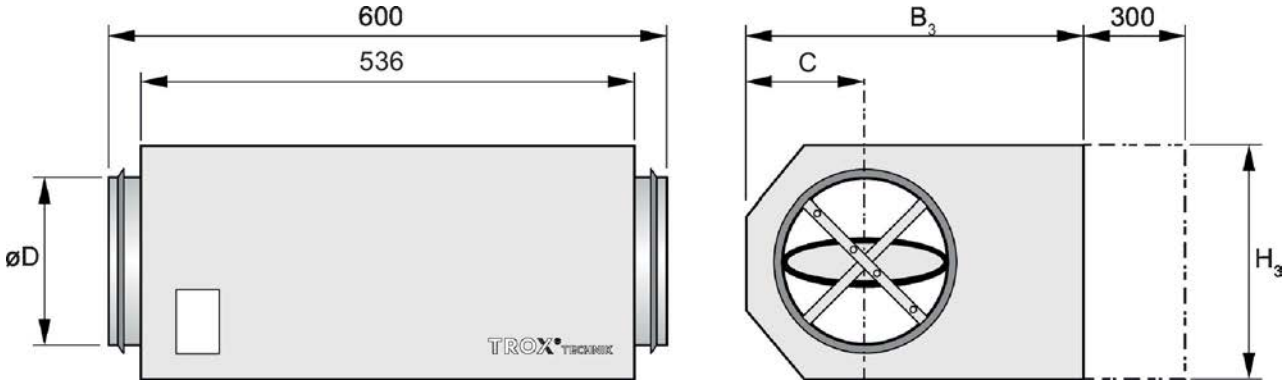

Fig. 12: Dimensions

-- Keep clear to provide access to control components

Dimensions [in.]					Weight [lbs]	
NW	∅D	C	B_3	H_3	Electrical	Pneumatic
5	4.88	5.08	14.65	8.70	38.58	34.17
6	6.14	4.37	14.65	8.70	38.58	34.17
8	7.83	7.17	18.23	12.24	41.89	37.48
10	9.80	6.18	18.23	12.24	41.89	37.48
12	12.36	11.38	24.69	18.15	50.71	46.30
16	15.71	9.69	24.69	18.15	50.71	46.30

4.2 TVR-Ex with electronic control

4.2.1 Control component TE*

Area of application and ATEX marking

Operating temperature/ humidity	50 °F to 104 °F at T6 50 °F to 122 °F at T5 Humidity according to EN 60335-1
External casing protection level	IP 42
ATEX directive	2014/34/EU (ATEX)
Type examination certifi-cate	TÜV 05 7218 X
Atmosphere: Gases (gases, mists and vapours)	II 2 G c II TX (note the operating temperature!) Zones 1 and 2
Atmosphere: Dusts	II 2D c II T 176 °F Zones 21 and 22

Differential pressure transducer

Supply voltage	24 VAC/DC +/-20%
Nominal current	150 mA
Power rating	approx. 4 W
Protection level	IP 66
IEC protection class	I (earthed)

Actuator/spring return actuator

Supply voltage	24 – 230 VAC 50/60Hz
Power rating[1]	120 VA max.
Protection level	IP66
IEC protection class	I (earthed)

[1] The switch-on current is 3 times to 5 times higher than the nominal current with a pulse of only few milliseconds; power rating including switch-on current.

Auxiliary switch

Voltage	30 V	250 V
Inductive load AC cos ϕ = 0.6	5 A	3 A
Inductive load DC L/R = 3 µs	5 A	0.03 A
Protection level	IP66	

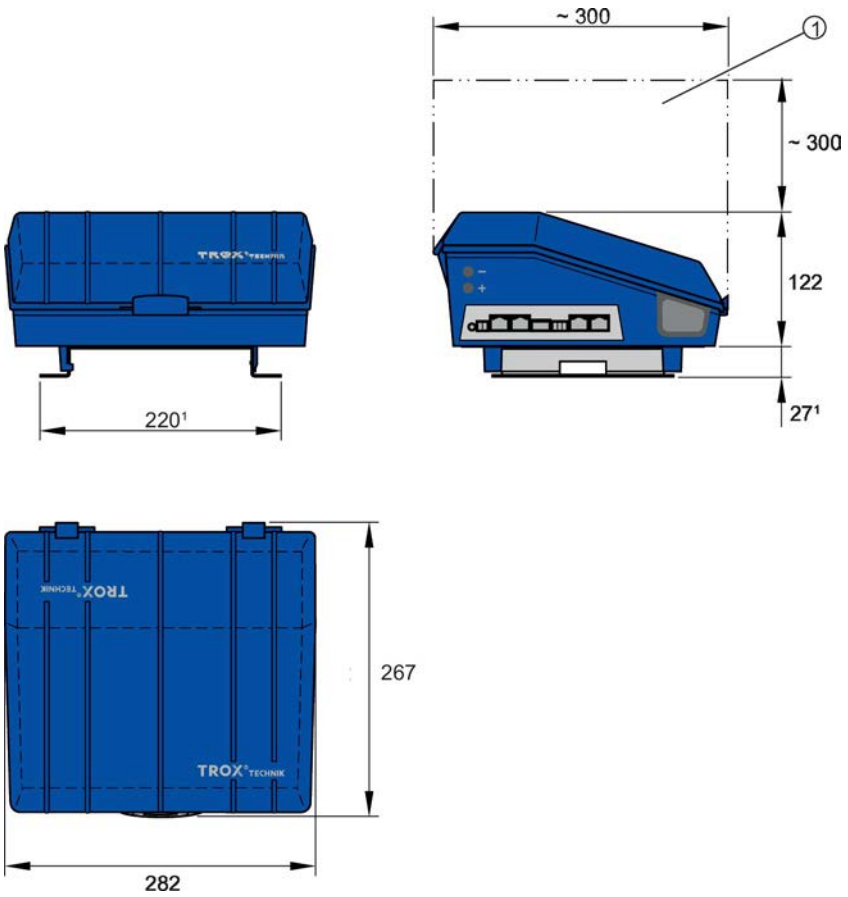

Fig. 13: Dimensions

① Keep clear to provide access

Electronic controller TCU3

Technical data	
Supply voltage	24 V AC / DC ±15 %, 50/60 Hz; optional: 230 V AC mains supply, only with the EM-TRF expansion module; optional: 230 V AC mains supply with UPS, only with the EM-TRF USV expansion module
Connecting cable	Double-stack terminal blocks for cables with up to 0.004 in² cross section. Note: Only up to 5 TCU3 controllers may be connected to the same 24 V voltage supply.
Power rating	8 VA
Micro fuse 0.2 × 0.79 in.	2 A, slow blow, 250 V
Controller recovery time after supply voltage failure	< 500 ms
Plug and play communication system	With automatic detection of the connected equipment and equipment functions:
	Communication cable: 984.25 max.
	Number of controllers: max. 24 per segment
Temperature range	Operation: 32 ... +122°F
	Storage: 14 ... +158°F
Humidity	<90% no condensation

Technical data	
Area of application	Enclosed spaces
Protection level	IP 20
IEC protection class	III (protective extra-low voltage)

4.2.2 Control component S1*

Area of application and ATEX marking

Operating temperature/ humidity	50 °F to 104 °F at T6 50 °F to 122 °F at T5 Humidity according to EN 60335-1
External casing protection level	IP 42
ATEX directive	2014/34/EU (ATEX)
Type examination certificate	TÜV 05 7218 X
Atmosphere: Gases (gases, mists and vapours)	II 2 G c II TX (note the operating temperature!) Zones 1 and 2
Atmosphere: Dusts	II 2D c II T 176 °F Zones 21 and 22

Differential pressure transducer/volume flow controller

Supply voltage	24 VAC/DC +/- 10%, 50...60 Hz +/- 20%
Power rating [1]	4 VA max.
Protection level	IP 66
IEC protection class	I (earthed)

[1] An overcurrent protection device (< 10 A) is required on the installation side. Note the switch-on current: approx. 2 A for 1 s

Actuator/spring return actuator

Supply voltage	24 VAC/DC 50/60Hz
Power rating[1]	120 VA max.
Protection level	IP66
IEC protection class	I (earthed)

[1] The switch-on current is 3 times to 5 times higher than the nominal current with a pulse of only few milliseconds; power rating including switch-on current.

Auxiliary switch

Voltage	30 V	250 V
Inductive load AC cos ϕ = 0.6	5 A	3 A
Inductive load DC L/R = 3 µs	5 A	0.03 A
Protection level	IP66	

4.3 TVR-Ex with pneumatic control

4.3.1 Control component P*5

Area of application and ATEX marking

Operating temperature/ humidity	50 °F to 104 °F at T6 50 °F to 122 °F at T5 Humidity according to EN 60335-1
External casing protection level	IP 42
ATEX directive	2014/34/EU (ATEX)
Type examination certifi-cate	TÜV 05 7218 X
Atmosphere: Gases (gases, mists and vapours)	II 2 G c IIB TX (note the operating temperature!) Zones 1 and 2
Atmosphere: Dusts	not approved

Pneumatic volume flow controller

Pressure supply	18.86 psi ± 1.45 psi
Actual value signal	2.9...14.5 psi
Protection level	IP 30

Pneumatic actuator

Operating pressure range	4.35...13.05 psi
Control pressure [1]	0...17.4 psi
Protection level	IP 20
Air consumption	0.3 l per stroke
Max. pressure	21.76 psi

[1] Required for achieving the actuator forces.

Operation only with instrument air that is free from oil, water and dust.

5 Transport, storage and packaging

Sharp edges and sheet metal parts

CAUTION!

Danger of injury from sharp edges and sheet metal parts.

– Always wear protective gloves when handling the unit.

Damage to the VAV terminal unit

NOTICE!

Risk of damage to the VAV terminal unit!

– Handle the unit with care.
– Do not lift the VAV terminal unit by its control components, the damper blade or differential pressure sensor.
– Lift the unit only by lifting the entire casing.

5.1 Delivery check

Check delivered items immediately after arrival for transport damage and completeness. In case of any damage or an incomplete shipment, contact the shipping company and your supplier immediately.

TVR-Ex TE* supply package:

- VAV terminal unit TVR-Ex, including:
  – Ex-MAX actuator
  – ExCos pressure transducer
  – Ex-Box terminal box
- TCU3 electronic controller in a closed two-part casing, including:
  – Retaining clip for the cover (only with EM-TRF installed)
  – 2 cable glands, plastic (black)
  – 2 cable ties for strain relief
  – 2-pin plug connector for connection X1
  – 3-pin plug connector for connection X5 (sensor AI)
  – Expansion modules as ordered (see delivery note)
  – TCU3 installation and operating manual
- TVR-Ex installation and operating manual

The EASYLAB controller TCU3 is usually shipped separately.

If any expansion modules have been ordered, the controller is factory fitted with these modules and shipped as a complete unit.

TVR-Ex S1* supply package:

- VAV terminal unit TVR-Ex, including:
  – Ex-MAX actuator
  – Ex-REG electronic Compact controller
- TVR-Ex installation and operating manual

TVR-Ex P*5 supply package:

- VAV terminal unit TVR-Ex, including:
  – Pneumatic actuator
  – Pneumatic controller
- TVR-Ex installation and operating manual

5.2 Transport on site

- If possible, take the product in its transport packaging up to the installation location.
- Do not remove the protective wrapping until just before installation.

5.3 Storage

If the product has to be stored temporarily:

- Moisture and lack of ventilation can lead to oxidation, even on galvanised components. Remove any plastic wrapping in order to avoid oxidation.
- Protect the product from dust and contamination.
- Store the product in a dry place and away from direct sunlight.
- Do not store the product below 14 °F or above 140 °F.

5.4 Packaging

Properly dispose of packaging material.

6 Installation

6.1 Safety

Only specialist personnel are allowed to perform the described work on the VAV terminal unit.

Only skilled qualified electricians are allowed to work on the electrical system. The personnel must have been trained and be aware of the special conditions that apply to areas with potentially explosive atmospheres.

Sharp edges and sheet metal parts

CAUTION!

Danger of injury from sharp edges and sheet metal parts.

– Always wear protective gloves when handling the unit.

Damage to the VAV terminal unit

NOTICE!

Risk of damage to the VAV terminal unit!

– Handle the unit with care.
– Do not lift the unit by its control components, the damper blade or differential pressure sensor.
– Lift the unit only by lifting the entire casing.

6.2 VAV terminal unit

Installation location

- Select the installation location for the VAV terminal unit such that the control components and inspection panels remain accessible. Provide at least 300 mm clear space for the cover to be opened.
- Installation of the unit downstream of an elbow, flap or other disruptive body requires a straight duct section of 5D.
- Pipe bends can be connected directly if the curvature radius is at least 1D.

Installation orientation for TVR-Ex with pneumatic control (control component P*5)

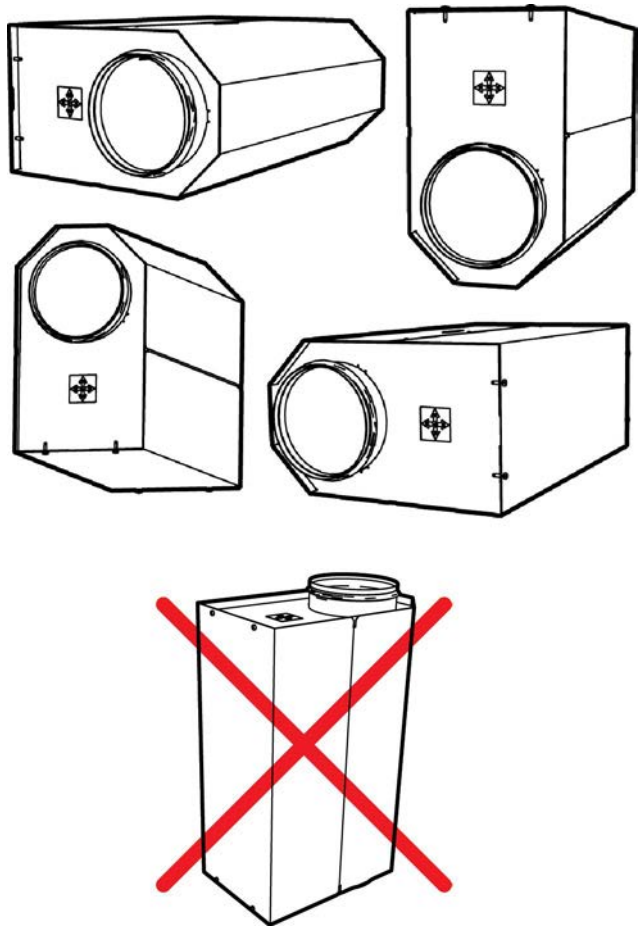

Fig. 14: Installation orientations for TVR-Ex with pneumatic control

Be sure to install the unit according to the airflow direction indicated by the arrow on the unit.

The installation orientation for the VAV terminal unit with electronic control can be selected as required.

Installation

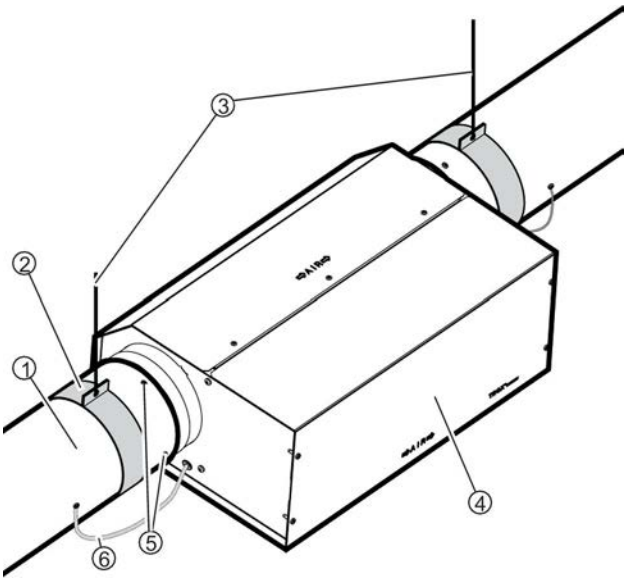

Fig. 15: VAV terminal unit when installed

① Duct
② Pipe clamp with acoustic insulation insert
③ Suspension
④ TVR-Ex
⑤ Screw or rivet connection
⑥ Ground strap

Personnel:

- HVAC technician

Protective equipment:

- Industrial safety helmet
- Protective clothing
- Protective gloves
- Safety shoes

Check TVR-Ex for contamination; clean it if necessary.

1. Install the VAV terminal unit professionally, with a suitable suspension system, secured with lock-nuts. Load suspension systems only with the weight of the unit. Adjacent components and connecting ducts must be supported separately.
2. Push ducts (DIN 1506 or EN 13180) onto the spigots; spigots are fitted with lip seals.
3. Fix the VAV terminal unit with screws or rivets to the spigots such that it cannot be moved.
4. For equipotential bonding, make an electrical connection by connecting the VAV terminal unit with the ground straps on both sides to the ducting. The connection should be self-locking.
5. Connect the ducting to the terminal point for equipotential bonding of the building.

It is also possible to connect the VAV terminal unit directly to the terminal point for equipotential bonding of the building. The casing is fitted with a blade receptacle connector for this purpose.

6.2.1 Electronic controller TCU3 (control component TE*)

Areas with potentially explosive atmospheres

WARNING!

Risk of explosion! Do not use the TCU3 controller in areas with potentially explosive atmospheres!

There is a risk of explosion if the electronic controller TCU3 is used in an area with potentially explosive atmospheres.

– Install the electronic controller TCU3 outside areas with potentially explosive atmospheres.

Installation location

Install the electronic controller TCU3 outside areas with potentially explosive atmospheres.

The electronic controller can be screwed directly onto the wall or inside a switch cabinet for this purpose.

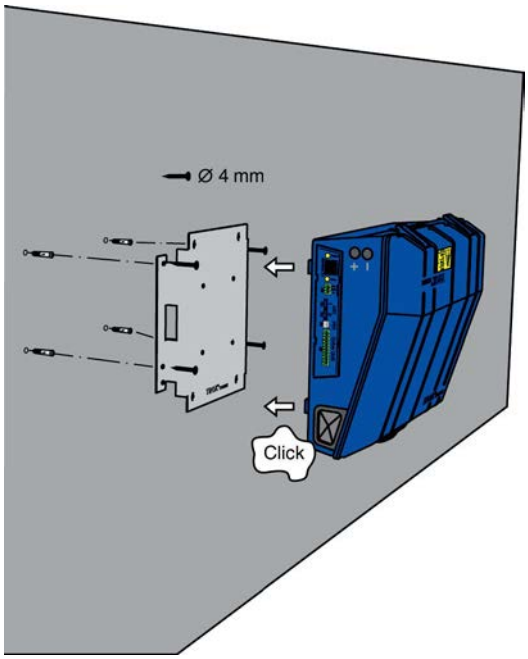

Fig. 16: Fixing the mounting bracket

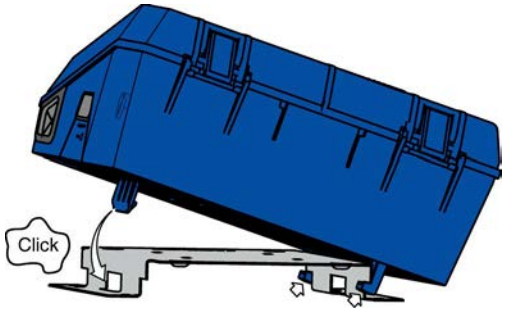

Fig. 17: Attaching TCU3

7 Wiring

Electric shock

DANGER!

Danger of electric shock! Do not touch any live components! Electrical equipment carries a dangerous electrical voltage.

– Only skilled qualified electricians are allowed to work on the electrical system.
– Switch off the power supply before working on any electrical equipment.

7.1 Installation information

Connect the controller according to the standard wiring diagrams in this manual or according to the project-specific wiring diagrams. Comply with the following requirements and regulations:

- VDE guidelines
- Local regulations and guidelines
- Wiring guidelines and project-specific circuit diagrams

7.1.1 Installation according to ATEX

The cables to be used must comply with ATEX. The type of protection of the unit must not be compromised by the connection of pipes, cables etc. Irrespective of the type of protection, all cables to be used must have been tested and approved according to the code of good practice.

We recommend that you use screened cables for the signal lines. Have separate cables for supply voltage and signals, and separate grounds.

All cables must be fed into the TVR-Ex casing through the provided cable glands. The connections are made in the terminal box or in the connection box of the differential pressure transducer, which have been approved for use in potentially explosive atmospheres.

No loose terminals must be used in the terminal box or in the connection box. Once you have connected the cables, tighten the cable glands firmly in order to ensure IP protection (IP 66).

In areas with potentially explosive atmospheres unused openings for cable penetration must be sealed with certified dummy plugs.

Equipotential bonding

TVR-Ex must be connected to the earth bar by a qualified electrician. Equipotential bonding prevents electrostatic ignition hazards.

7.2 Wiring of TVR-Ex with control component TE*

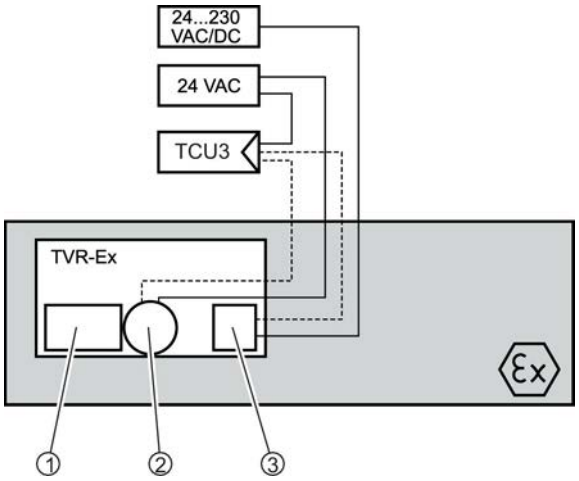

Fig. 18: TE wiring diagram*

① Actuator
② Differential pressure transducer
③ Terminal box
-- Signal line
— Supply voltage

Personnel:

- Skilled qualified electrician

Protective equipment:

- Safety shoes

Complete the wiring according to the wiring example *Chapter 7.2.2 'Wiring of control component TE*' on page 33* or according to the provided project-specific wiring documents.

1. Connect the cables for supply voltage and signals of the actuator or spring return actuator to the explosion-proof terminal box (in the TVR-Ex casing).
2. Connect the differential pressure transducer (in the TVR-Ex casing) to the integral explosion-proof terminal box.
3. Connect the electronic controller TCU3, *Chapter 7.2.1 'Connecting the electronic controller TCU3 ' on page 29*

7.2.1 Connecting the electronic controller TCU3

Special wiring instructions

EASYLAB TCU3 supply voltages

- Do not connect the 24 V supply if the EM-TRF or EM-TRF-USV expansion module has been installed.
- Do not connect 230 V and 24 V supply voltage at the same time.
- Select the correct cable size (cross section)

Voltage supply for a limited number of controllers

Only up to 5 TCU3 controllers may be connected to the same 24 V AC/DC voltage supply and using double-stack terminals. (Limitation of currents on the PCB and terminals)

Polarity of the power supply

Be sure to maintain the correct polarity when you wire up controllers to AC and DC voltage supplies.

Strain relief

Use the strain relief in the casing for all connection cables inside the casing.

Cabling

Be careful so as not to kink or disconnect the measuring tubes on the VAV air terminal unit.

7.2.1.1 External connections / signalling

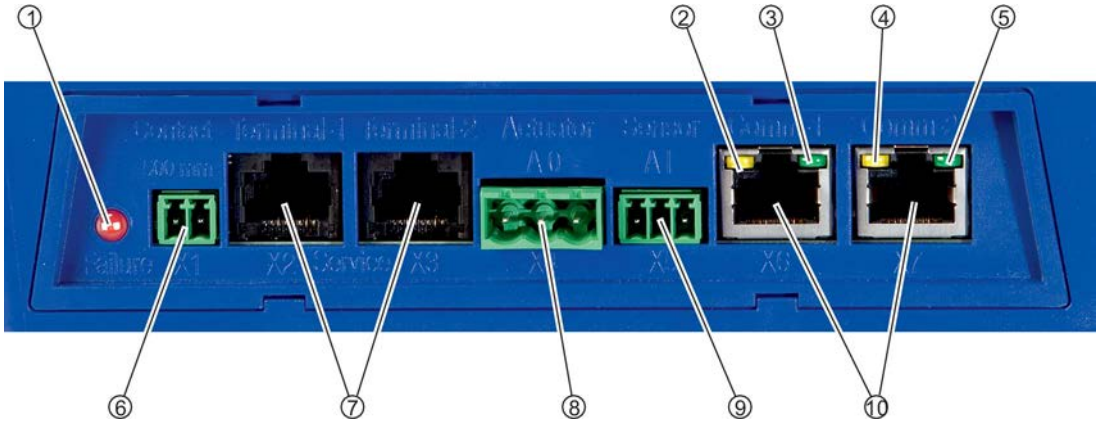

Fig. 19: External connections

No.	Description	Meaning	
①	Red LED Error LED	LED on	Up to 3 s: Switch-on procedure. Permanent: Switch-on procedure error
		LED blinking	Error; for detailed diagnosis use EasyConnect software
		LED blinking slowly	Undefined equipment function; for detailed diagnosis use EasyConnect software
		LED off	Normal operation; if no. 5 is also off → Equipment not ready
②	Yellow LED Cable termination Communication cable	LED on	Cable termination is enabled
		LED off	Cable termination is inactive
③	Green LED	Not used	
④	Yellow LED, communication cable data reception	LED on	Data is being received from several controllers
		LED on with brief interruptions	Data is being received from few controllers
		LED off	No data reception from other controllers
⑤	Green LED, controller operation (heartbeat)	LED blinking slowly	Normal controller operation
		LED flickering	Controller operation; PC communication with EasyConnect configuration/diagnosis software
		LED off	Unit not ready
⑥	Connection for sash contact	Connection of a volt-free switch contact	
⑦	Connections for control panels 1 and 2	For EASYLAB control panels, e.g. BE-SEG-xx or BE-LCD-01 (use only outside areas with potentially explosive atmospheres)	
⑧	Connection for the damper blade actuator	Ex-Max actuator, connection according to wiring diagram	

No.	Description	Meaning
⑨	Analogue input AI5	Signalling of variable extract/supply air volume flow rates, can be used for 0-10 V DC signals. (Characteristic can be configured)
⑩	Connection for the communi-cation cable	For SF-UTP network patch cables

7.2.1.2 Internal connections / signalling

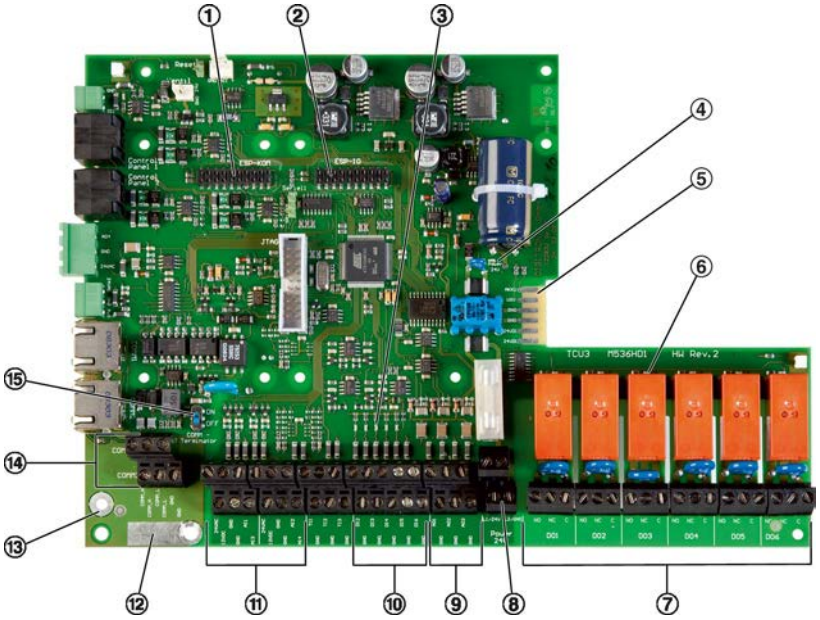

Fig. 20: Internal connections / signalling

No.	Description	Meaning	
①	Expansion slot 1 (ESP-KOM)	Connection point for expansion modules, e.g. LonWorks® EM-LON, or BACnet or Modbus expansion EM-BAC-MOD-01	
②	Expansion slot 2 (ESP-I/O)	Connection for expansion modules	
③	Status display for digital inputs DI1 … DI6	LED on	Digital input DI is active
		LED off	Digital input DI is not active
④	Power 24 V	LED on	24 V supply voltage OK
		LED off	24 V supply voltage failed / sagging
⑤	Connection of mains supply	Connection for EM-TRF and EM-TRF-USV expansion modules	
⑥	Status display for digital out-puts DO1 … DO6	LED on	Digital output DO is active
		LED off	Digital output DO not active
⑦	Terminal block DO1 … DO6	Digital outputs 1 ... 6	Changeover relays
			max. 250 V AC 12 A, switch-on current 25 A max.
⑧	Terminal block, 24 V	24 V AC / DC supply voltage	
⑨	Terminal block AO1 ... AO3	Analogue outputs 1 ... 3	Can be configured for analogue voltage of 0-10 V DC
⑩	Terminal block DI2 … DI6	Digital inputs 2 ... 6	For volt-free switch contacts

No.	Description	Meaning	
⑪	Terminal block AI1 … AI4	Analogue inputs 1 ... 4	AI1: Connection for diaphragm pressure transducer ExCos according to wiring diagram AI2 ...AI4: Can be configured for analogue voltage of 0-10 V DC
⑫	Clip / connection	Strain relief / connection for communication cable shield	
⑬	PE connection	PE earthing screw	
⑭	COMM-1 connection COMM-2 connection	Terminals for communication cable SF-UTP network cable	
⑮	COMM terminal resistor	Switch ON	Communication cable termination is active
		Switch OFF	Communication cable termination is inactive

7.2.2 Wiring of control component TE*

NOTICE!

This diagram shows the standard wiring which covers most applications.

For special applications refer to the supplied project-specific wiring diagram.

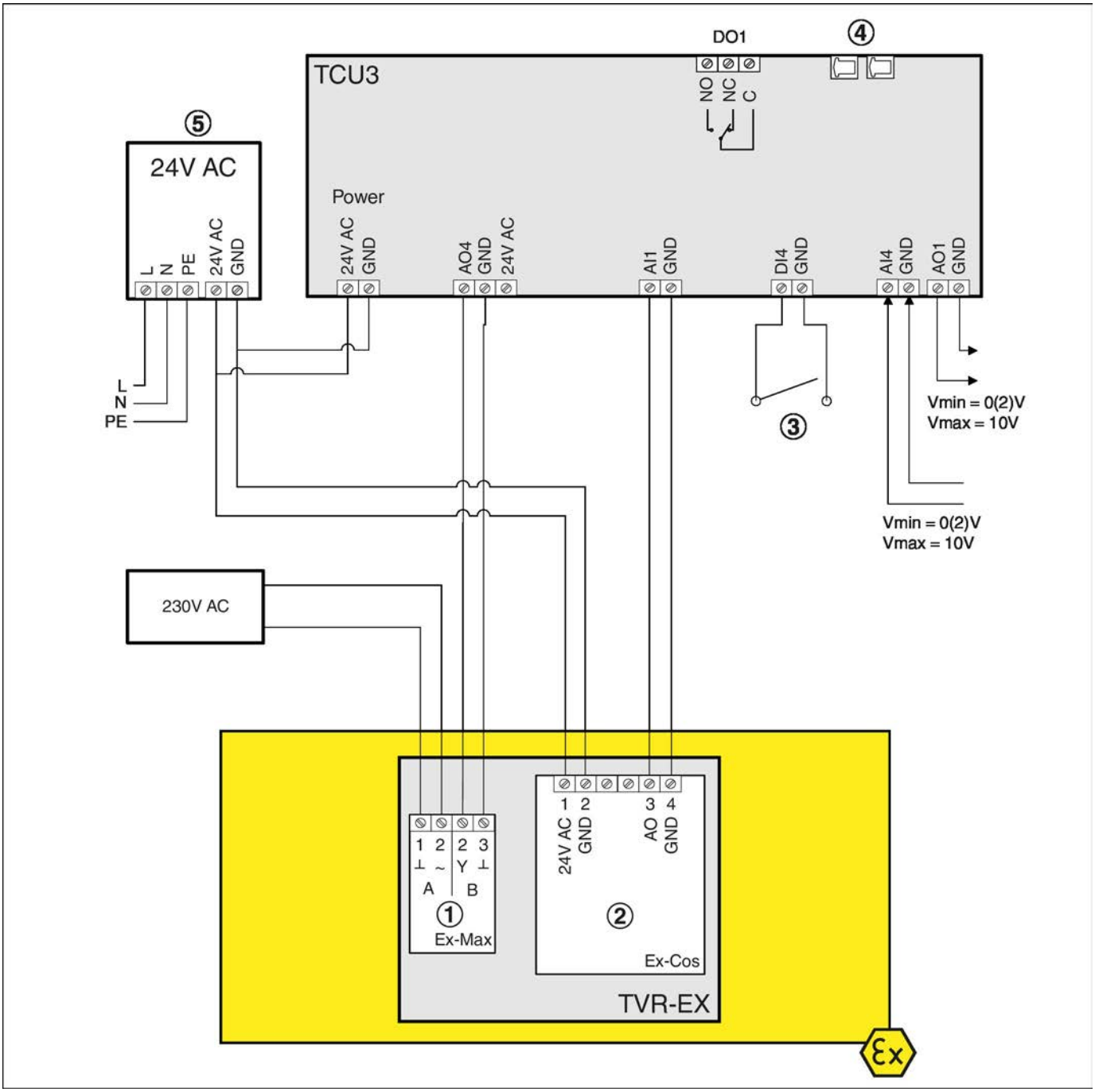

Fig. 21: Standard wiring

① Explosion-proof actuator
A Terminals 1-5 (in the ExBox terminal box)
B Terminals 1-6 (in the ExBox terminal box)
② Differential pressure transducer
③ Shut-off, volt-free contact closed = shut-off (switch provided by others)
④ Communication connection
⑤ Transformer (by others)

TCU3 terminal connections	
Terminal	Meaning
AI1	Diaphragm pressure transducer
AI4	Setpoint volume flow rate
AO1	Actual volume flow rate of the VAV terminal unit
AO4	Control signal for the actuator
DI4	Shut-off
DO1	Local alarm

7.3 Wiring of TVR-Ex with control component S1*

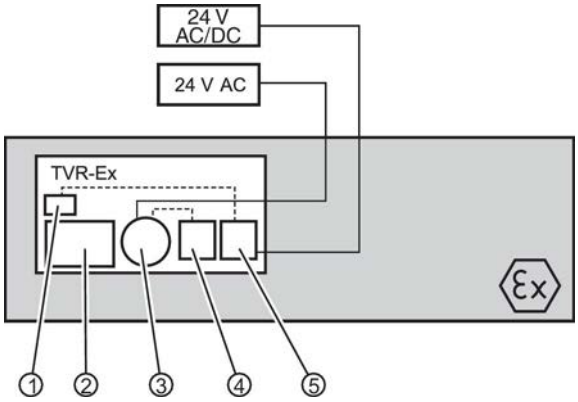

Fig. 22: S1 wiring diagram*

① Auxiliary switch (only with S1X and S1Y)
② Actuator
③ Volume flow controller
④ Volume flow rate setting
⑤ Terminal box
-- Signal line
— Supply voltage

Personnel:

- Skilled qualified electrician

Protective equipment:

- Safety shoes

Complete the wiring according to the terminal connections *Chapter 7.3.1 'Terminal connections for control component S1*' on page 35*.

1. Connect the cables for supply voltage and signals of the actuator or spring return actuator to the explosion-proof terminal box (in the TVR-Ex casing).
2. Connect the electronic controller (in the TVR-Ex casing) to the integral explosion-proof terminal box.

7.3.1 Terminal connections for control component S1*

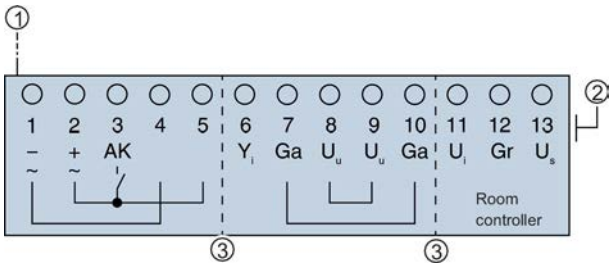

Fig. 23: Connections on the volume flow controller (S1S, S1F, S1X and S1Y)

① PE = protective earth
② PA = equipotential bonding
③ Galvanic isolation 1.5 kV

Terminal connections	
Terminal	Meaning
1	24 V AC / DC ~ -
2	24 V AC / DC ~ +
3	AK alarm contact
4	24 V AC / DC: Supply voltage, actuator (factory wiring)
5	24 V AC / DC: Supply voltage, actuator (factory wiring)
6	Y_i: Setpoint value, actuator, 4 – 20 mA (factory wiring)
7	Ga: Ground Y, GND (factory wiring)
8	U_u: Actual value, actuator, 0 – 10 V (factory wiring)
9	U_u: Damper blade position, 0 – 10 V
10	Ga: Ground Y, GND
11	U_i: Actual value, controller, 0/2 – 10 V
12	Gr: Ground, controller, GND
13	U_s: Setpoint value, controller, 0/2 – 10 V

Auxiliary switch

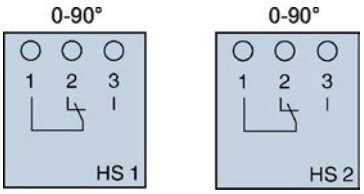

Fig. 24: Connections, auxiliary switch (S1X and S1Y)

Auxiliary switch 1 (HS1)

Connecting cable		ExBox terminal connections
1	Black	1
2	Grey	2
3	brown	3

Auxiliary switch 2 (HS2)

Connecting cable		ExBox terminal connections
1	Black	4
2	Grey	5
3	brown	6

8 Pneumatic connection

8.1 Pneumatic control (control component P*5)

DANGER!

Operation only with instrument air that is free from oil, water and dust.

8.1.1 Installation information

Personnel:

- HVAC technician

Protective equipment:

- Safety shoes

Connect TVR-Ex according to the tubing diagrams
Chapter 8.1.2 'Tubing' on page 37.

- Connect the tubes to the tube connections on the outside of TVR-Ex (bulkhead fittings).

  Use only pneumatic tubes with an inside diameter of 4 mm and an outer diameter of 0.24 in.

8.1.2 Tubing

Constant volume flow rate control

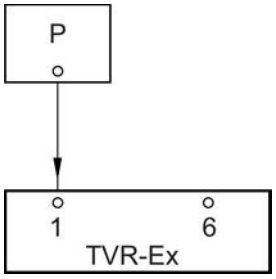

Fig. 25: Constant volume flow rate control

P Operating pressure
1 Input for the operating pressure (18.86 psi ± 1.45 psi)
6 Input for the nominal volume flow rate (2.9 to 14.5 psi)

Room temperature control

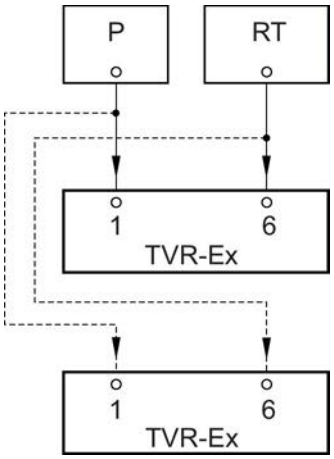

Fig. 26: Room temperature control

P Operating pressure
RT Room temperature controller
1 Input for the operating pressure (18.86, ± 1.45 pi)
6 Input for the nominal volume flow rate (2.9 to 14.5 psi)

Room temperature and room pressure control

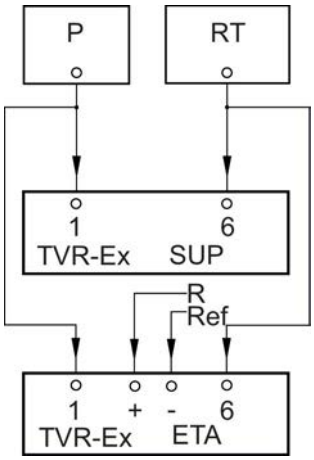

Fig. 27: Room temperature and room pressure control

P Operating pressure
RT Room temperature controller
SUP Supply air controller
ETA Extract air controller
R Room
Ref Reference room
1 Input for the operating pressure (18.86 psi, ± 1.45 psi)
6 Input for the nominal volume flow rate (2.9 to 14.5 psi)
\+ Input for the room pressure actual value
\- Input for the reference room pressure actual value

Room temperature control with shut-off function

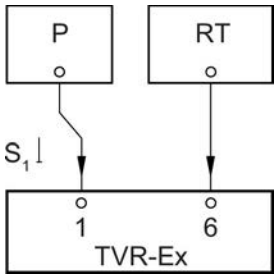

Fig. 28: Room temperature control with shut-off function

P Operating pressure
RT Room temperature controller
S_1 Switch for operating mode
1 Input for the operating pressure (18.86 psi, ± 1.45 psi)
6 Input for the nominal volume flow rate (2.9 to 14.5 psi)

Shut-off function for building section:

Switch setting S_1	Operating mode
Closed	Room temperature control
Open	Shut-off

9 Commissioning and operation

9.1 Testing before commissioning

To comply with Industrial Health and Safety Regulations, a system requiring monitoring must be tested by an approved monitoring body before it is taken into operation for the first time and before it is taken into operation after a significant modification.

Correct assembly, installation, installation conditions and functional safety with regard to the intended use are subject to testing.

9.2 Commissioning control component TE*

Personnel:

- Skilled qualified electrician

Protective equipment:

- Safety shoes

- Check for correct installation.
- Check the equipotential bonding.
- Check the wiring.

1. ▸ Switch on the voltage.
2. ▸ Correct the zero point of the differential pressure transducer (see *Chapter 3 'Operation' on page 16*).
3. ▸ Load the control parameters.

   Controller parameters are factory set as ordered.

   Using a PC or notebook and the TROX EasyConnect configuration software, you can verify the configuration settings and adjust them if necessary. *Chapter 9.2.1 'Connection setup, PC and TCU3' on page 39*

   > *Required hardware and software is available from TROX; you may also request commissioning support from our technical service.*

4. ▸ Switch on the air conditioning system.
5. ▸ As the final step of commissioning, test the function of the controller according to the project specifications for the required operating modes.

   Compare the volume flow rate setpoint value for each operating mode with the actual value and document the results.

9.2.1 Connection setup, PC and TCU3

Connection setup using the EASYLAB configuration cable

Connect your PC to the EASYLAB controller using an USB-RS485 interface adapter and the provided plug-in configuration cable.

Both the software and the required components can be ordered as one accessory, TROX material no. B588NF4.

Fig. 29: Connection setup using the EASYLAB configuration cable

Connection with the BlueCON Bluetooth adapter

Alternatively, wireless communication between the controller and the PC can be established using the BlueCON Bluetooth adapter.

This requires a Bluetooth interface on the PC/notebook (either integral hardware or external, e.g. with a USB stick) and the BlueCON module plugged into the controller.

Both the software and the required components can be ordered as one accessory, TROX material no. B588NF5.

Fig. 30: Connection setup with the BlueCON Bluetooth adapter

9.3 Commissioning control component S1*

Personnel:

- Skilled qualified electrician

Protective equipment:

- Safety shoes

- Check for correct installation.
- Check the equipotential bonding.
- Check the wiring.

1. Switch on the voltage.
2. Correct the zero point of the differential pressure transducer (see *Chapter 3 'Operation' on page 16*).
3. Set the control parameters

> ***More information***
>
> *For more information on commissioning and settings refer to the product documentation for ExReg- V300 at www.schischek.de.*

4. Switch on the air conditioning system.

9.4 Commissioning pneumatic controllers (control component P*5)

Personnel:

- HVAC technician

Protective equipment:

- Safety shoes

- Check for correct installation.
- Check the equipotential bonding.
- Check the tubing.

1. Check and switch on the operating pressure.
2. Switch on the air conditioning system.
3. Check V_{min} override control.
4. Record the actual value signal Δp_w.
5. Check V_{max} override control.
6. Record the actual value signal Δp_w.

9.5 Operation

Once commissioning and the setting of parameters have been completed, the controller will operate independently and require no intervention from the system owner.

The statutory inspection intervals must be complied with.

In case of a malfunction, decommission the VAV terminal unit and have it repaired before you commission it again.

10 Maintenance

VAV terminal unit TVR-Ex

WARNING!

Only authorised specialist personnel are allowed to perform the described maintenance measures.

TVR-Ex, the actuator and the electric/pneumatic controller are maintenance-free with regard to wear, but the VAV terminal unit must still be included in the regular cleaning of the ventilation system. Regular care and maintenance ensure operational readiness, functional reliability, and long service life of the VAV terminal unit.

The statutory regulations for maintenance must be complied with.

The system owner is responsible for maintenance. The system owner is responsible for creating a maintenance plan, for defining the maintenance goals, and for the functional reliability of the equipment.

Units for installation in areas with potentially explosive atmospheres must only be opened by the manufacturer. However, the following components may be opened for maintenance work:

- TVR-Ex casing
- Casing of the electronic controller TCU3
- Terminal box of the actuator
- Connection box of the differential pressure transducer
- Connection box of the volume flow controller

Electronic controller TCU3

The electronic components of the controller do not require maintenance. Special maintenance requirements may apply to the VAV terminal unit depending on where it is installed.

For example, the function of fume cupboard controllers should be checked once a year according to DIN 12924, EN 14175, BGR 120 (Rules for safety and health protection/laboratories) and the German TRGS 526 (Technical Rules for Hazardous Substances).

The system owner is responsible for operational reliability. Switch off the supply voltage and secure it against being switched on accidentally before working on any electrical equipment.

10.1 Inspection

Inspection should be performed by a specialist and at least once a year in accordance with statutory regulations and guidelines (see chapter 2).

The test of every single unit must be documented and evaluated. If the requirements are not fully met, suitable remedial action must be taken.

10.1.1 Inspection work

DANGER!

Danger of electric shock! Do not touch any live components! Electrical equipment carries a dangerous electrical voltage.

– Only skilled qualified electricians are allowed to work on the electrical system.
– Switch off the power supply before working on any electrical equipment.

The following inspection work must be performed:

Personnel:
- Skilled qualified electrician

Protective equipment:
- Safety shoes

1. Remove contamination from the VAV controller that affects its function. Remove any significant dust deposits from the controller casing.
2. Check all screws for firm seating and retighten them, if necessary.
3. Adjust the zero point of the differential pressure transducer, ↳ *Chapter 3.1.3 'Zero point correction (only with control components TE* and S1*)' on page 17* (only with control components TE* and S1*).
4. Test the function of the control loops (including volume flow rate) and correct the control parameters, if necessary.
5. Check if the measured values are plausible.
6. Check special functions (override controls, alarm suppression on monitoring systems) and make corrections, if necessary.
7. Check sequence control loops (room balancing) and make corrections, if necessary.
8. Clean the sensors, if contaminated.
9. Document maintenance measures and measurement results.

10.2 Repair

For safety reasons, repair work must only be carried out by expert qualified personnel or the manufacturer. Only genuine replacement parts must be used. Significant modifications may require a subsequent commissioning test.

10.3 Maintenance service

Regular maintenance by the TROX Technical Service is recommended in order to ensure operational readiness, functional reliability, and long service life of the unit.

Maintenance service

The TROX Technical Service can establish the actual condition of the unit, adapt or correct it if necessary, and ensure that the unit is in proper condition after maintenance.

Necessary adjustments and parameter setting can be conducted as part of maintenance such that a high level of safety is always maintained.

11 Troubleshooting

Most malfunctions can be rectified with the help of the troubleshooting diagrams. If this does not suffice to remedy a malfunction, contact the TROX Service.

11.1 Electronic control - trouble-shooting

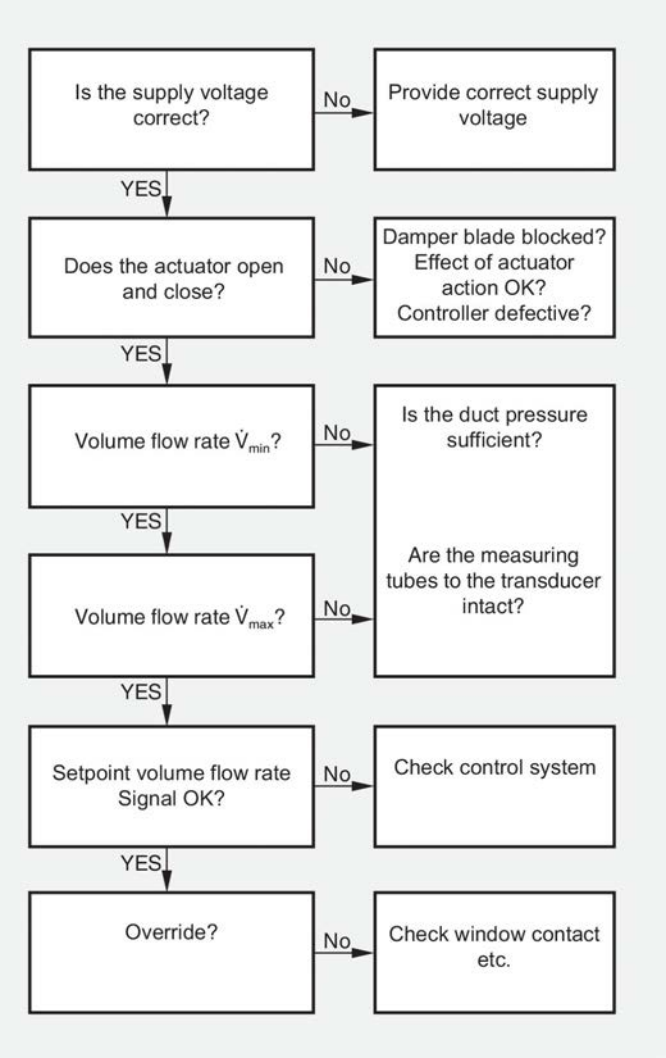

Fig. 31: Troubleshooting for controller components TE and S1**

11.2 Pneumatic control - trouble-shooting

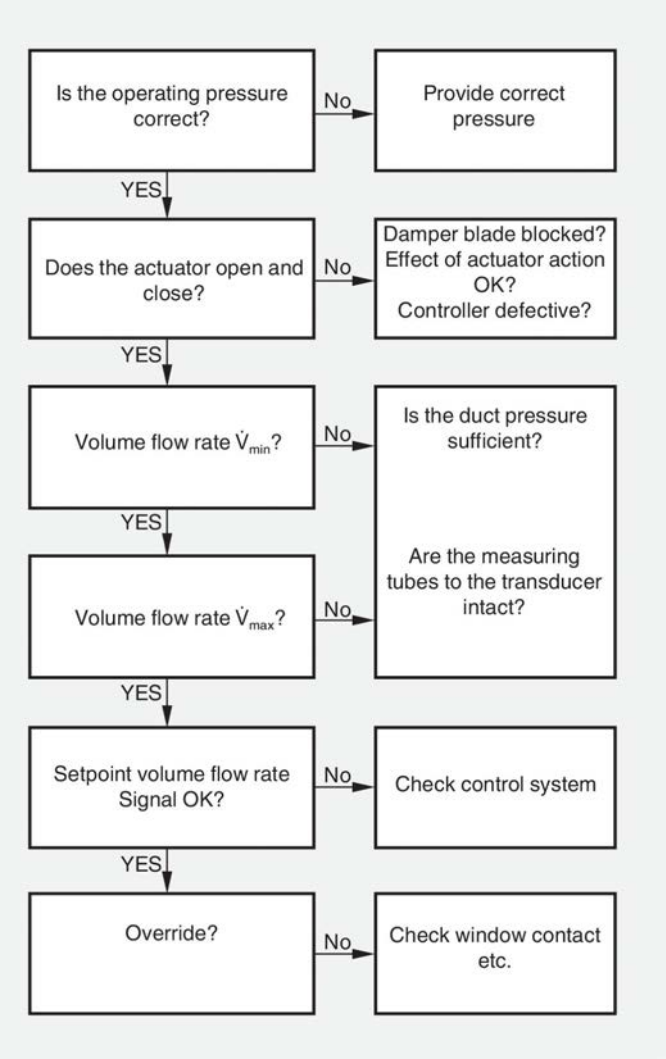

*Fig. 32: Troubleshooting for controller component P*5*

12 Disassembly and disposal

12.1 Removing VAV terminal unit TVR-Ex

1. Switch off the ventilation system.
2. Switch off the power supply or operating pressure.
3. **DANGER!**

   Danger of electric shock! Do not touch any live components! Electrical equipment carries a dangerous electrical voltage.

   – Only skilled qualified electricians are allowed to work on the electrical system.
   – Switch off the power supply before working on any electrical equipment.

   Disconnect the connecting cable or remove the tubing.
4. Remove the unit.

12.2 Removing the electronic controller TCU3

DANGER!

Danger of electric shock! Do not touch any live components! Electrical equipment carries a dangerous electrical voltage.

– Only skilled qualified electricians are allowed to work on the electrical system.
– Switch off the power supply before working on any electrical equipment.

If you want to replace the electronic controller TCU3 (replacement part), first disconnect the electrical cables.

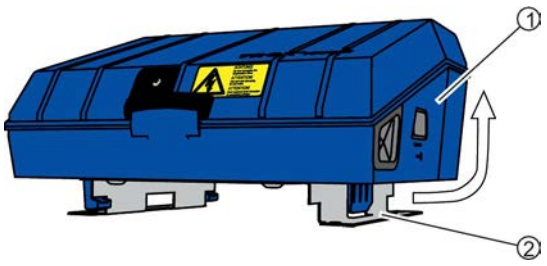

Fig. 33: Detaching the controller

① Controller TCU3
② Mounting bracket

1. Release the fixing brackets with a screwdriver.
2. Remove the TCU3 controller by lifting it.

12.3 Disposal

Have the VAV terminal unit disposed of by an authorised company.

13 Declaration of conformity

TROX® TECHNIK

EG Konformitätserklärung
EC Declaration of conformity
Déclaration de conformité

TROX GmbH
Heinrich-Trox-Platz
D-47504 Neukirchen-Vluyn

Hiermit erklären wir dass die Maschine/Baugruppe
We hereby declare that the machine / module
que le module / la machine

Volumenstromregler Serie TVR-Ex
VAV controller type TVR-Ex /
Régulateur de debit série TVR-EX /

Folgenden Richtlinien entspricht:
Complies with the following directives
Est conforme aux directives suivantes

- **Richtlinie 2014/34/EU**
  Directive 2014/34/EU
  Directive 2014/34/EU

Angewandte harmonisierte Normen:
Applied harmonized standards
Normes harmonisées appliquées

- **EN 1127-1, Explosionsfähige Atmosphären - Explosionsschutz - Teil 1: Grundlagen und Methodik**
  EN 1127-1, Explosive atmospheres - Explosion prevention and protection - Part 1: Basic concepts and methodology
  EN 1127-1, Atmosphères explosives - Prévention de l'explosion et protection contre l'explosion - Partie 1: Notions fondamentales et méthodologie
- ***EN 13463-1*, Nicht-elektrische Geräte für den Einsatz in explosionsgefährdeten Bereichen - Teil 1: Grundlagen und Anforderungen**
  EN 13463-1, Non-electrical equipment for potentially explosive atmospheres - Part 1: Basic method and requirements
  EN 13463-1, Appareils non électriques destinés à être utilisés en atmosphères explosibles - Partie 1: Prescriptions et méthodologie
- ***EN 13463-5*, Nicht-elektrische Geräte für den Einsatz in explosionsgefährdeten Bereichen - Teil 5: Schutz durch konstruktive Sicherheit „c“**
  EN 13463-5, Non-electrical equipment intended for use in potentially explosive atmospheres - Part 5: Protection by constructional safety 'c'
  EN 13463-5, Appareils non électriques destinés à être utilisés en atmosphères explosibles - Partie 5: Protection par sécurité de construction «c»

Baumusterprüfbescheinigung TÜV 05 ATEX 7218 X, Prüfbericht 557 / Ex 218.02 / 05
EC type-examination certificate TÜV 05 ATEX 7218 X, audit report 557 / Ex 218.02 / 05
Attestation de conformité TÜV 05 ATEX 7218 X, rapport d'audit 557 / Ex 218.02 / 05

Kennzeichnung elektrische Regelung:
Marking electronic control:
Identification commande électronique:
Ex II 2 G c II TX
Ex II 2D c II T 176 °F

Kennzeichnung pneumatische Regelung:
Marking pneumatic control:
Identification commande pneumatique :
Ex II 2 G c II B TX

Neukirchen-Vluyn, 09.04.2018

Jan Heymann

CE-Beauftragter, Authorised
Representative, CE-marked products

14 Index

A

Application ... 7
Area of application ... 7
ATEX note ... 28

C

Checking delivered goods ... 24
Checking delivered goods for completeness ... 24
Checks ... 41
Close ... 16
Closing the casing ... 16
Closing the cover ... 16
Commissioning
- Control component S1* ... 40
- Control component TE* ... 39
- Pneumatic controller ... 40

Commissioning tool ... 12
Connecting
- Auxiliary switch ... 36
- Room controller (supply and extract air) ... 33
- Volume flow controller ... 35

Connections ... 28
- S1* ... 35

Copyright ... 3
Correct use ... 7

D

Defects liability ... 4
Differential pressure transducer ... 17
Dimensions ... 18
Dimension sheet ... 18
Disassembly ... 44
Disposal ... 44

E

Electric current ... 8
Electronic control
- Function ... 11
- System description ... 11
- TCU3 ... 11
- Troubleshooting ... 43
- VAV terminal unit ... 11, 12

F

Faults ... 43
Function
- Electronic control ... 11
- Pneumatic control ... 13

H

Hygiene requirements ... 9

I

Incorrect use ... 7
Inspection ... 41
Installation location
- TCU3 ... 26
- VAV terminal unit ... 25

Installation orientation
- TCU3 ... 26
- VAV terminal unit ... 25

Instruction ... 9

L

Limitation of liability ... 4

M

Maintenance ... 41

O

Open ... 16
Opening the casing ... 16
Operation ... 40
Other applicable documentation ... 3

P

Packaging ... 24
Personnel ... 9
Pneumatic control
- Function ... 13
- Room pressure control ... 14
- Troubleshooting ... 43
- VAV terminal unit ... 14
- Volume flow control ... 14

Protective equipment ... 10

Q

Qualification ... 9

R

Removing the casing ... 16
Removing the cover ... 16
Repair ... 10, 41
Replacement parts ... 10
Residual risks ... 8
Room pressure control ... 14

S

Safeguards ... 8
Service ... 41
Signs ... 8
Storage ... 24
Symbols ... 4, 7
System description
- Electronic control ... 11

System owner ... 8
System owner's obligations ... 8

T
TCU3 11
Electronic control 11
Installation location 26
Installation orientation 26
Technical data
Electronic control 19, 22
Pneumatic control 23
Technical service 3
Transport 24
Transport damage 24
Troubleshooting 43
Electronic control 43
Pneumatic control 43
TROX Technial Service 41
Tubing diagram
Constant volume flow rate control 37
Room temperature and room pressure control 37
Room temperature control 37
Room temperature control with shut-off function 38

U
Usage 7

V
VAV terminal unit
Electronic control 11, 12
Installation 26
Installation location 25
Installation orientation 25
Pneumatic control 14

W
Weight 18
Wiring diagram 28
S1* 35

Z
Zero point 17
Zero point correction 17

TROX® TECHNIK

The art of handling air

TROX GmbH
Heinrich-Trox-Platz
47504 Neukirchen-Vluyn
Germany

+49 (0) 2845 202-0
+49 (0) 2845 202-265
E-mail: trox@trox.de
www.troxtechnik.com

© TROX GmbH 2015