Assembly and operating instructions GB/en

VAV terminal unit

TVJ

VARYCONTROL

TROX® TECHNIK

The art of handling air

Read the instructions prior to performing any task!

TROX GmbH
Heinrich-Trox-Platz
47504 Neukirchen-Vluyn
Germany
Telephone: +49 (0) 2845 202-0
Fax: +49 (0) 2845 202-265
E-mail: trox-de@troxgroup.com
Internet: www.troxtechnik.com

CD10021, 2, GB/en
01/2024

© TROX GmbH 2023

General information

Information about installation and commissioning instructions

This installation and commissioning manual enables operating or service personnel to use the variable air terminal unit (hereinafter also referred to as VAV terminal unit or unit) safely and efficiently.

The manual must be kept near the unit to be available for use at all times.

The personnel performing work on the device must read and understand this manual carefully before starting any work. The basic prerequisite for safe working is to comply with the safety notes and all instructions in this manual.

The local regulations for health and safety at work and the general safety regulations for the area of application of the ventilation unit also apply.

Illustrations in this manual are mainly for information and may differ from the actual design.

Other applicable documentation

In addition to these instructions, the following documents must be observed:

- Product data sheets
- Instructions for the electrical control components (assemblies)
- Project-specific wiring documents, if any

TROX Technical Support

To ensure that your request is processed as quickly as possible, please have the following information ready:

- Product designation
- TROX order number
- Delivery date
- Issue or fault log ↳ *Chapter 8.1 'Troubleshooting' on page 25*

Online	www.troxtechnik.com
Phone	+49 2845 202-0

Safety notes

Symbols are used in this manual to alert readers to areas of potential hazard. Signal words express the degree of the hazard.

Comply with all safety instructions and proceed carefully to avoid accidents, injuries and damage to property.

DANGER!
Imminently hazardous situation which, if not avoided, will result in death or serious injury.

WARNING!
Potentially hazardous situation which, if not avoided, may result in death or serious injury.

CAUTION!
Potentially hazardous situation which, if not avoided, may result in minor or moderate injury.

NOTICE!
Potentially hazardous situation which, if not avoided, may result in property damage.

ENVIRONMENT!
Environmental pollution hazard.

Tips and recommendations

Useful tips and recommendations as well as information for efficient and fault-free operation.

Safety notes as part of instructions

Safety notes may refer to individual instructions. In this case, safety notes will be included in the instructions and hence facilitate following the instructions. The above listed signal words will be used.

Example:

1. Loosen the screw.
2. **CAUTION!**

   Danger of finger entrapment when closing the lid.

   Be careful when closing the lid.
3. Tighten the screw.

Specific safety notes

The following symbols are used in safety notes to alert you to specific hazards:

Warning signs	Type of danger
	Warning – hand injuries.
	Warning – high-voltage.
	Warning – danger zone.

Table of contents

1 Safety ... 6
1.1 Correct use ... 6
1.2 Safety signs ... 6
1.3 Dangers when handling the unit ... 6
1.3.1 Electric shock hazards ... 7
1.4 System owner's responsibility ... 7
1.5 Qualified staff ... 8
1.6 Personal protective equipment ... 8
1.7 Repair and replacement parts ... 8
1.8 General safety measures ... 8

2 Transport, storage and packaging ... 9
2.1 Delivery check ... 9
2.2 Transport on site ... 9
2.3 Storage ... 9
2.4 Packaging ... 9

3 Product description ... 10
3.1 Product overview ... 10
3.2 Functional description ... 10
3.3 Display of the damper blade position ... 11
3.4 Labelling on unit ... 11
3.4.1 Rating plate ... 11
3.4.2 Scale sticker (Easy control component only) ... 11
3.4.3 Adjustment sticker ... 11
3.4.4 CE marking / declaration of incorporation ... 12

4 Installation ... 13
4.1 Safety ... 13
4.2 General installation information ... 13
4.2.1 Installation of sound attenuators, fire dampers and heat exchangers ... 13
4.2.2 Installation orientation ... 14
4.2.3 Airflow direction ... 14
4.2.4 Upstream conditions ... 15
4.3 Fixing/suspension ... 16
4.4 Installation of secondary silencer TX ... 17
4.5 Connecting the duct ... 17
4.6 Insulation ... 18

5 Electrical connection ... 19
5.1 Safety notes ... 19
5.2 Installation instructions ... 19

6 Commissioning and operation ... 20
6.1 Factory preparation ... 20
6.2 Requirement for commissioning ... 20
6.3 Commissioning ... 20
6.3.1 Installation and connection ... 20
6.3.2 Parameterisation by others and settings ... 20
6.3.3 Control components for duct pressure control ... 20
6.3.4 Control components for room pressure control ... 21
6.3.5 Functional test ... 21
6.4 Operation ... 21
6.5 Volume flow rate measurement ... 21
6.5.1 Volume flow rate calculation ... 22
6.5.2 C values ... 22

7 Maintenance ... 24
7.1 System owner's responsibility ... 24
7.2 Maintenance ... 24
7.3 Inspection measures ... 24
7.4 Repair ... 24
7.5 Maintenance service ... 24

8 Faults ... 25
8.1 Troubleshooting ... 25

9 Decommissioning ... 28
9.1 Safety ... 28
9.2 Disassembly ... 28
9.3 Disposal ... 28

10 Technical data ... 29
10.1 General data ... 29
10.2 Control component/attachments ... 29

11 Index ... 33

1 Safety

1.1 Correct use

The VAV terminal unit from the TVJ type is used for variable volume flow rate control, throttling or shut-off in ventilation systems within closed rooms.

If the air is contaminated with dust, fluff, moisture or sticky particles, only VAV terminal units that use a control component with a static differential pressure transducer may be used.

The VAV terminal unit type TVJ can also be used in ventilation systems with soiling or light chemical contamination (e.g. point extraction systems). The material design of the regulating device must meet the requirements of the air pollution. Depending on the composition and concentration of the polluted air, the regulating device can be chosen from galvanised steel (standard construction) or powder coating (P1). For this application, only control components with static differential pressure transducers may be used. We recommend control components with static differential pressure transducer and room air induction.

The VAV terminal unit may only be used in kitchen extract air systems if it is ensured that the extract air is cleaned by highly effective aerosol separators (>90 %); observe VDI 2052.
In addition, shortened inspection and cleaning intervals must be included in the maintenance plan.

Incorrect use

WARNING!

Danger of injury or risk of damage to property due to unauthorised use!

Incorrect use of the VAV terminal unit can lead to dangerous situations.

Do not use the VAV terminal unit:

- in areas with potentially explosive atmospheres (EX)
- in aircraft
- outdoors without sufficient protection against the effects of weather
- in wet areas
- for areas of application that are not described in the product brochure

Modifying the unit or using replacement parts that have not been approved by TROX is not permitted.

1.2 Safety signs

The following symbols and signs are usually found in the work area. They apply to the very location where they are found.

WARNING!

Danger due to illegible signage!

Over time, stickers and signs may fade or become otherwise illegible, meaning that hazards cannot be identified and necessary operating instructions cannot be followed. There is then a risk of injury.

- Ensure that all of the safety, warning and operating information is clearly legible.
- Replace illegible signs or stickers immediately.

Electrical voltage

Only skilled qualified electricians are allowed to work in areas marked as having electrical voltage.

Unauthorised people must not enter areas, open cabinets or work on components where an electrical voltage is present and which are hence marked with this symbol.

1.3 Dangers when handling the unit

The unit is a state-of-the-art product and meets current safety requirements. Residual risks cannot be excluded, however, and you should proceed with caution. This section describes the residual risks that have been identified in a risk assessment.

Always follow the safety notes in this manual to reduce health hazards and prevent any hazardous situations.

1.3.1 Electric shock hazards

Electric current

DANGER!

Danger of death due to electric current!

Contact with live parts poses an immediate danger to life due to electric shock. Damaged insulation or damaged parts are a life threatening hazard.

- Work on the electrical system must only be carried out by skilled qualified electricians.
- If the insulation is damaged, disconnect the power supply immediately and have the insulation repaired.
- Before you start working on electric systems and equipment, switch off the supply voltage and secure it against being switched on accidentally. Comply with the following safety rules:
  - Switch off the supply voltage.
  - Secure it against being switched on accidentally.
  - Ensure that no voltage is present.
  - Connect to the earth; short circuit connection.
- Do not bypass or disable any circuit breakers. Be sure to maintain the correct current rating when you replace a circuit breaker.
- Ensure that live parts do not come into contact with moisture. Moisture can cause a short circuit.

1.4 System owner's responsibility

System owner

The system owner is a natural or legal person who for commercial or business purposes owns or manages the ventilation system or component or allows third parties to use or operate it, but continues to bear legal responsibility for the safety of users, staff or third parties while the product is in use.

System owner's obligations

The unit is intended for commercial use. The system owner is therefore subject to the legal obligations of occupational health and safety regulations.

In addition to the safety notes in this manual, the applicable regulations for safety, accident prevention and environmental protection must also be complied with.

In particular:

- The system owner must be aware of the applicable occupational health and safety regulations and carry out a risk assessment to determine any additional hazards that may exist or result from the specific working conditions at the installation location. The system owner has to create operating instructions for the unit that reflect the results of this risk assessment.
- The system owner has to ensure, throughout the entire operating period of the unit, that these operating instructions conform to applicable standards and guidelines; in case of any deviation, the system owner has to adapt the instructions.
- The system owner must secure the unit to prevent access by unauthorised individuals.
- The system owner must clearly define the responsibilities for operation, maintenance, cleaning, troubleshooting and removal.
- The system owner has to ensure that all individuals who handle or use the unit have read and understood this manual.
- The system owner must provide the employees with the required personal protective equipment.
- The system owner must comply with the local fire regulations.

Hygiene requirements

The system owner has to comply with the local regulations and harmonised standards for hygiene requirements. These include, among other things, compliance with the corresponding maintenance and test intervals.

1.5 Qualified staff

WARNING!

Danger of injury due to insufficiently qualified individuals!

Incorrect use may cause considerable injury or damage to property.

– Only specialist personnel must carry out work.

The following degrees of qualification are required for the work described in the operating manual:

HVAC technician
HVAC technicians are individuals who have sufficient professional or technical training in the field they are working in to enable them to carry out their assigned duties at the level of responsibility allocated to them and in compliance with the relevant guidelines, safety regulations and instructions. HVAC technicians are individuals who have in-depth knowledge and skills related to HVAC systems; they are also responsible for the professional completion of the work under consideration.

HVAC technicians are individuals who have sufficient professional or technical training, knowledge and actual experience to enable them to work on HVAC systems, understand any potential hazards related to the work under consideration, and recognise and avoid any risks involved.

Skilled qualified electrician
Skilled qualified electricians are individuals who have sufficient professional or technical training, knowledge and actual experience to enable them to work on electrical systems, understand any potential hazards related to the work under consideration, and recognise and avoid any risks involved.

1.6 Personal protective equipment

Personal protective equipment is equipment that protects the user against health or safety risks at work.

Personal protective equipment must be worn for various types of work; the protective equipment required is listed in this manual together with the description of each type of work.

Description of personal protective equipment

Industrial safety helmet

Industrial safety helmets protect the head from falling objects, suspended loads, and the effects of striking the head against stationary objects.

Protective gloves

Protective gloves protect hands from friction, abrasions, punctures, deep cuts, and direct contact with hot surfaces.

Safety shoes

Safety shoes protect the feet from crushing, falling parts and prevent slipping on a slippery floor.

1.7 Repair and replacement parts

The devices must be repaired by qualified personnel using genuine replacement parts only. This particularly applies to work on the electrical equipment. For safety reasons, defective devices should therefore be repaired by the TROX Technical Service, ↳ *'TROX Technical Support' on page 3*.

1.8 General safety measures

Large temperature differences

Be careful when there is a large temperature difference. If the unit has been kept in an unheated area, wait two hours before switching on the supply voltage. Condensation may damage the electronic components beyond repair. Only after about 2 hours will the system have reached room temperature.

Foreign matter and liquids

Be careful when objects or liquids have got into the casing, or if the unit emits a smell or smoke. Decommission the unit and have it checked by the manufacturer.

2 Transport, storage and packaging

Safety notes on handling the unit

CAUTION!

Danger of injury from sharp edges and sheet metal parts.

– Always wear protective gloves when handling the unit.

NOTICE!

Risk of damage to the unit!

– Handle the unit with care.
– Do not lift the unit by its control components, the damper blade or differential pressure sensor.
– Lift the unit only by lifting the entire casing.

2.1 Delivery check

Check delivered items immediately after arrival for transport damage and completeness. In the case of any damage or an incomplete shipment, contact the shipping company and your supplier immediately.

2.2 Transport on site

- If possible, take the product in its transport packaging up to the installation location.
- Do not remove the protective wrapping until just before installation.

2.3 Storage

If the product has to be stored temporarily:

- Moisture and lack of ventilation can lead to oxidation, even on galvanised components.
  Remove any plastic wrapping in order to avoid oxidation.
- Protect the product from dust and contamination.
- Store the product in a dry place and away from direct sunlight.
- Do not store the product below 14 °F or above +122 °C.

2.4 Packaging

Properly dispose of packaging material.

3 Product description

3.1 Product overview

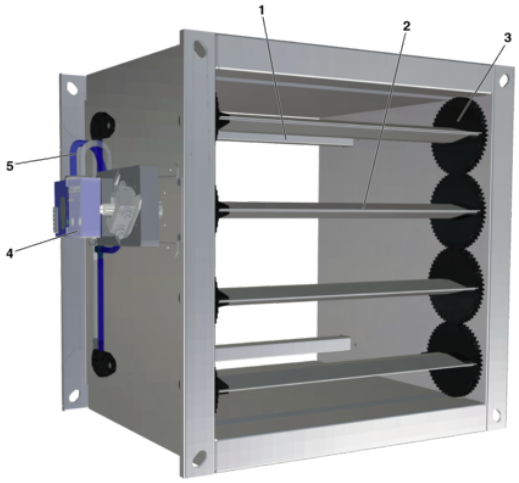

Fig. 1: TVJ product overview

1 Measuring probes for differential pressure measurement
2 Damper blade
3 Worm gear
4 Electronic control component
5 Hoses between measuring probes and control component

Note: When installing the regulating device, ensure that the hoses are routed without kinks!

3.2 Functional description

To measure the volume flow rate, the differential pressure is recorded at the measuring probes of the VAV terminal unit TVJ. The differential pressure is then passed on to the control component via hoses. The control component consists of a differential pressure transducer that converts the pressure into an electrical signal, an electronic control circuit and an actuator to control the damper blade. With the Easy or Compact attachments, all components are integrated together in one housing. In the case of the Universal or LABCONTROL attachments, the actuator is a separate component.

In most applications, the setpoint value for a air terminal unit comes from a ambient temperature or air quality controller. The controller compares the actual value with the setpoint value and alters the control signal of the actuator if there is a difference between the two values.

Notes for regulating devices for duct pressure control

In order to regulate the duct pressure, VAV terminal units require a suitable control component, a suitable pressure tapping point in the duct system and a stable reference measuring point.

In most applications, the set point value for a differential pressure controller is stored as a fixed value in the pressure control component.

In the case of duct pressure control, the control component must not be connected to the differential pressure sensors of the VAV terminal unit but to the duct pressure tapping point and a reference measuring point.
The accessibility of the connections for the differential pressure sensors on the regulating device may therefore be restricted for differential duct pressure controllers depending on the design of the regulating device and the control component.

For duct pressure detection, a so-called pressure tapping set with pressure tap and hose is supplied, with which the control component for pressure detection is connected to the air duct.

The atmospheric pressure at the control component is generally used as the reference measuring point, provided that it is stable and is not in a pressure-controlled range.

Notes on regulating devices for room pressure control

To regulate the room pressure, VAV terminal units require a suitable control component, a pressure tapping point in the room and a stable reference measuring point.

In most applications, the set point value for a differential pressure controller is stored as a fixed value in the pressure control component.

In the case of room pressure control, the control component is not to be connected to the differential pressure sensors of the VAV terminal unit but to the room pressure tapping point and the reference measuring point.
The accessibility of the connections for the differential pressure sensors on the regulating device may therefore be restricted for differential room pressure controllers depending on the design of the regulating device and the control component.

The pressurised rooms must be sufficiently tight to build up the required pressure. In addition, the rooms must allow overflow so that the control components can regulate the pressure (at least 10% of the total extract air in the room as overflow).
A reference measuring point is a room with constant atmospheric pressure against which the room pressure to be controlled is measured.

The reference measuring point should take the following aspects into account:

- No room that is surrounded by ventilated rooms or is ventilated itself
- No corridor with elevator
- No elevator shaft
- No wind load on the reference measuring point

3.3 Display of the damper blade position

The damper blade position corresponds to the mark on the shaft and is thus recognisable from the outside.

Clamping device (frictional connection)

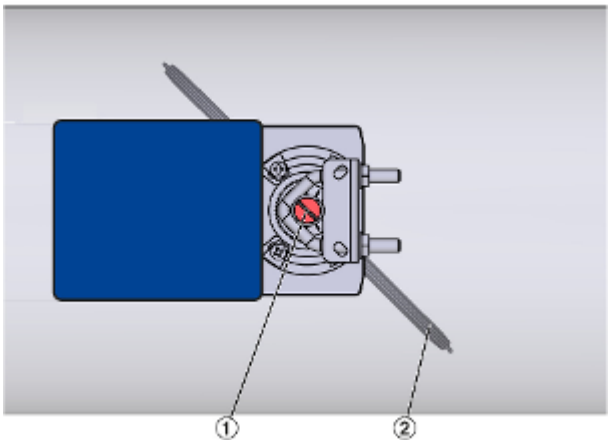

Fig. 2: Display with clamping device

1 Shaft with marking for position indication
2 Damper blade

3.4 Labelling on unit

3.4.1 Rating plate

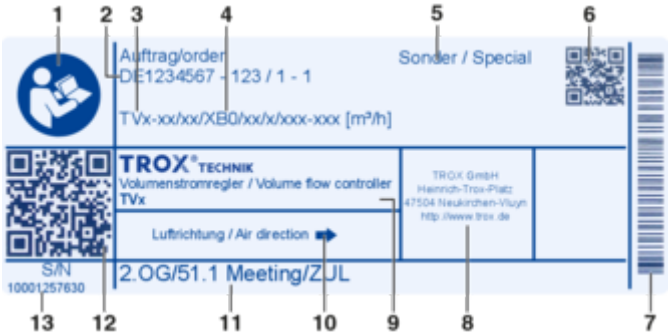

Fig. 3: Type plate (example)

1 Note on observing the operating instructions
2 Order data commission number – item number; if necessary, serial number if there are several pieces in the item
3 Order code
4 Order code detail of the control component
5 Information on devices that deviate from the standard
6 QR code containing the customer text (11) below in machine-readable form
7 Barcode with the serial number (for manufacturing processes at TROX)
8 Manufacturer's address
9 Product and type
10 Arrow indicating the airflow direction *Chapter 4.2 'General installation information' on page 13*
11 Customer text for installation/use (tagging text from the order)
12 QR code with link in myTrox to individual product documentation matching the serial number
13 Serial number of the complete product, including the installed attachment

3.4.2 Scale sticker (Easy control component only)

The *'Easy'* control component also has a scale sticker on the regulating device. Using the scale sticker, the desired volume flow rate control range can be set as a percentage value on the potentiometer of the control component.

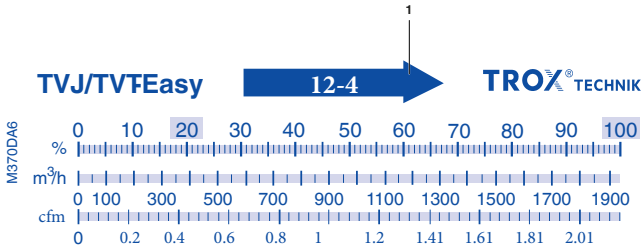

Fig. 4: Scale sticker TVJ Easy (example)

1 Arrow indicating the airflow direction

3.4.3 Adjustment sticker

The adjustment sticker documents the factory setting and the test steps stored for these variants.
Type and variant information only includes the order code details required for this process.

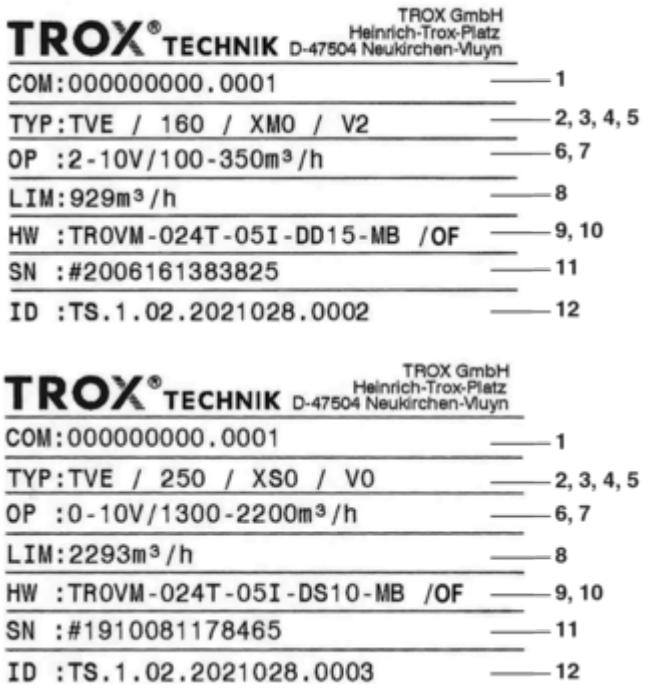

Fig. 5: Adjustment sticker example for TVE type with control components XM0 and XS0

1 Commission number. Item number
2 Type designation of VAV terminal unit
3 nominal size
4 Control component
5 Operating mode
  M ⇨ Modbus
  F ⇨ constant value
  V ⇨ variable
  0 or 2 ⇨ characteristic type
6 Characteristics 0 – 10 V or 2 – 10 V
7 Volume flow rate ranges q_{vmin} – q_{vmax} or constant value
8 Nominal volume flow rate q_{vnom}
9 Hardware type designation
10 Control component:
  OF ⇨ equipped at the factory
  SP ⇨ replacement part
11 Serial number
12 Test ID number

3.4.4 CE marking / declaration of incorporation

The TVJ unit complies with the Machinery Directive 2006/42/EC as partly completed machinery, as it does not fulfil an independent function on its own. A CE mark and a Declaration of Conformity are therefore not permitted in accordance with the Machinery Directive.
In accordance with the Machinery Directive, partly completed machinery obtains a Declaration of Incorporation. This Declaration of Incorporation confirms that the basic safety aspects of the Machinery Directive and any other directives are observed.

The Declaration of Incorporation can be accessed via the QR code on the rating plate. You can download the document on the Internet at *www.troxtechnik.com* .

4 Installation

4.1 Safety

Personnel:

- HVAC technician

Protective equipment:

- Protective gloves
- Safety shoes
- Industrial safety helmet

Only specialist personnel are allowed to perform the described work on the VAV terminal unit.

Only skilled qualified electricians are allowed to work on the electrical system.

CAUTION!

Danger of injury from sharp edges and sheet metal parts.

– Always wear protective gloves when handling the unit.

NOTICE!

Risk of damage to the unit!

– Handle the unit with care.
– Do not lift the unit by its control components, the damper blade or differential pressure sensor.
– Lift the unit only by lifting the entire casing.

4.2 General installation information

- **ATTENTION**: Pay attention to the arrow indicating the correct airflow direction on the unit!
  3.4 'Labelling on unit' on page 11
- Observe EN 1505 for fittings and bridges, in particular:
  – No sharp-edged bridges
  – At reductions and expansions: slants max. 7.5° per leg
- Select the installation location such that the VAV terminal unit, inspection accesses and the control components remain accessible for the following work:
  – Wiring
  – Adjustment work (service socket if necessary)
  – Servicing and maintenance, e.g. to replace control components, if necessary in several parts (controllers, transducers, actuators).

  For information on space requirements, see product data sheets.
- Do not swap supply and extract air units.
- Do not swap over units that belong together in command and tracking controls (e.g. supply air and extract air).
- Installation in kitchen extract air systems may only take place downstream of aerosol separators (>90 %); observe VDI 2052.

4.2.1 Installation of sound attenuators, fire dampers and heat exchangers

If additional components are arranged upstream of a regulating device in the airflow direction, the clearances specified in the table must be observed. Shorter distances lead to measurement inaccuracies on the terminal unit. The components can be arranged directly behind the terminal unit.

Distances to other components

Component	Clearance in airflow direction in front of TVJ
Splitter sound attenuators MS, XS, RS, or Splitters MK, XK, RK, RS-OL	7 x splitter width
Secondary silencer TX	No clearance, Non-active section in direction of TVJ
Fire damper	At least 4B or 4H, the greater value of the two
Heat exchanger	Behind terminal unit only

4.2.2 Installation orientation

For terminal units with diaphragm pressure transducers, the installation orientation of the control component (TROX Universal or EASYLAB controller) must be taken into account. The actual installation orientation must be compared with the variants on the sticker. If necessary, the position of the membrane pressure transducer must be adjusted, (Fig. 6).

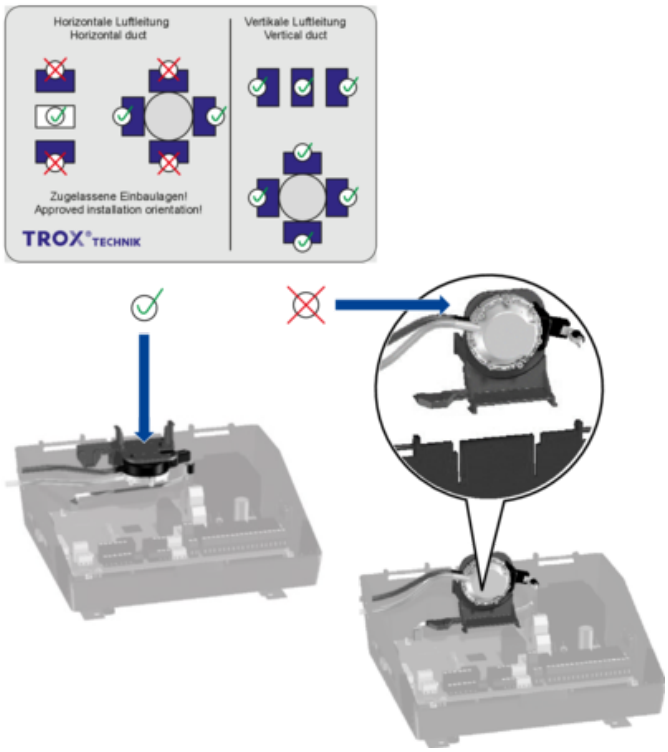

Fig. 6: Sticker showing installation orientations

✓ The installation orientation of the control component matches the factory installation position of the diaphragm pressure transducer

✗ For the installation orientation of the control component, the position of the membrane pressure transducer must be adjusted according to the figure.

4.2.3 Airflow direction

It is imperative that air terminal units are installed in their intended airflow direction. An arrow indicating the correct airflow *Chapter 3.4.1 'Rating plate' on page 11* is attached to the VAV terminal unit for this purpose.

4.2.4 Upstream conditions

The volume flow rate accuracy of the unit applies to a straight upstream section of the duct. Bends, junctions or a narrowing or widening of the duct cause turbulence that may affect measurement. The upstream conditions explained below must be adhered to in order to achieve the specified volume flow rate accuracy.

Bend

Vertical main duct	Horizontal main duct
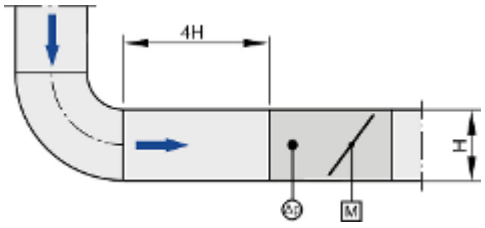	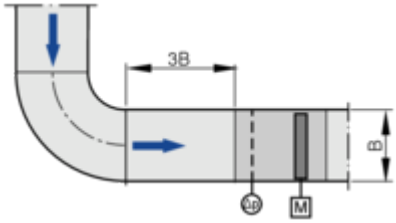
A bend – with a straight duct section of at least 4H upstream of the unit – has only a negligible effect on the volume flow rate accuracy Δq_v.	A bend –with a straight duct section of at least 3B upstream of the unit – has only a negligible effect on the volume flow rate accuracy Δq_v.

Junction from a main duct

Vertical main duct	Horizontal main duct
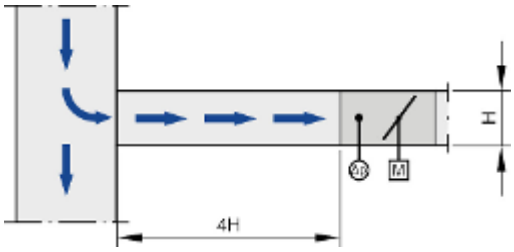	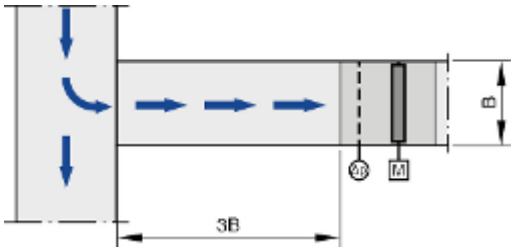
A junction from main duct causes strong turbulence. The stated volume flow rate accuracy can only be achieved with a straight duct section of at least 4H upstream.	A junction from main duct causes strong turbulence. The stated volume flow rate accuracy Δq_v can only be achieved with a straight duct section of at least 3B upstream.

4.2.4.1 Inflow via an open duct (extract air mode)

When flow enters the open end of a duct, the following conditions must be observed with regard to the positioning of the air terminal units in order to obtain a laminar flow and thus sufficient measuring accuracy.

Inflow via an open duct

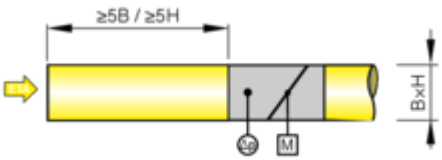

Fig. 7: Upstream conditions at open duct end

The inflow at the open end of a duct causes strong turbulence.

The stated volume flow rate accuracy can only be achieved with the following upstream straight duct sections:

- At least 5B or 5H (use larger dimensions)

Inflow via inflow aid

Alternatively, an inflow aid must be installed at the open duct end upstream of the VAV terminal unit:

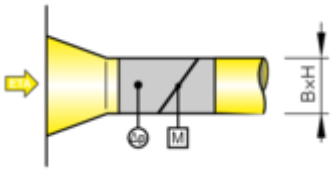

Fig. 8: Upstream conditions with inflow aid

The stated volume flow rate accuracy is achieved when an inflow aid is connected directly to the VAV terminal unit.

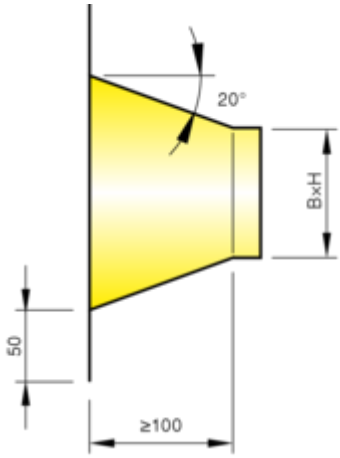

Fig. 9: Dimensions of inflow aid [mm]

4.3 Fixing/suspension

General installation information

- When designing and constructing ventilation and air conditioning systems, take into account the requirements of VDI 6022, in particular:
  - Hygienic, clean installation of all components and their air distribution surfaces.
  - Planning inspection/cleaning openings in the ducting system.
  - Avoidance of leaks.
- Affix the unit proficiently and only to load-bearing components.
- Load suspension systems only with the weight of the unit. Adjacent components and connecting ducts must be supported separately.
- Only use approved and sufficiently dimensioned suspensions for fixing. Secure screw connections against self-loosening, e.g., by locking them. Fixing material is not included in the supply package.
- For fixing, only use drilling screws that are as short as possible; these must not be screwed into the movement and sealing area of the damper blade or the differential pressure sensor.

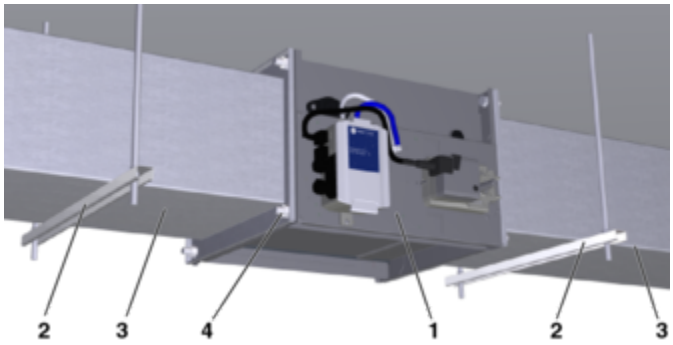

Fig. 10: Installation example suspension on ducting

1 VAV terminal unit, rectangular, e.g. TVJ
2 Suspension, e.g., with U-channel, threaded rod nuts with locknuts
3 Duct, rectangular
4 Fixing the duct to the terminal unit

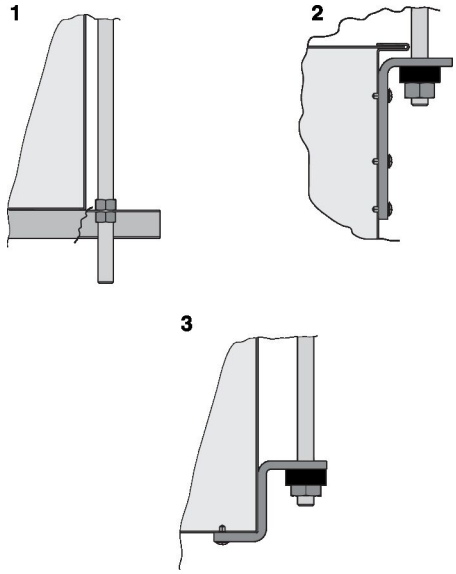

Fig. 11: Examples of fixings for rectangular units

1 Fixing with bracket or U-channel
2 Fixing to duct bracket (L-bracket)
3 Fixing to duct bracket (Z-bracket)

4.4 Installation of secondary silencer TX

Secondary silencers are supplied separately and must be mounted directly on the VAV terminal unit at the installation location. Suspend sound attenuator separately.

To optimise acoustics and flow, the TX sound attenuator has an empty chamber. When installing, observe the arrangement of the empty chamber depending on the installation location of the sound attenuator (in front of or behind the VAV terminal unit in airflow direction).

For sound attenuators with H=4 in, also note the position of the splitter Fig. 12 :

- Sound attenuator downstream of the regulating unit (supply air): ⇨ splitter at bottom
- Sound attenuator upstream of the regulating unit (extract air): ⇨ splitter at top

Sound attenuator with H=4

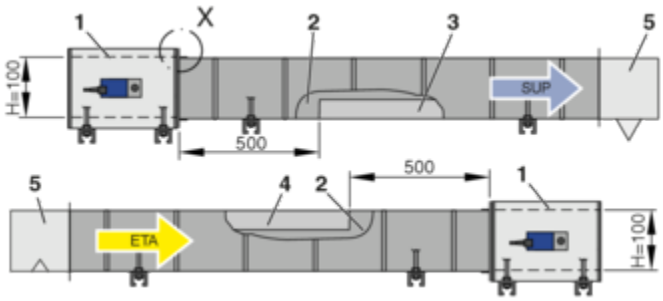

Fig. 12: Installation of sound attenuator TX H =4 in

1 VAV terminal unit
2 Empty chamber (20 in)
3 Splitter at bottom (TX behind VAV terminal unit in airflow direction)
4 Splitter at top (TX in front of VAV terminal unit in airflow direction)
5 Air diffuser (room end)
X Detail ⇨ Fig. 14

Sound attenuator with H>4

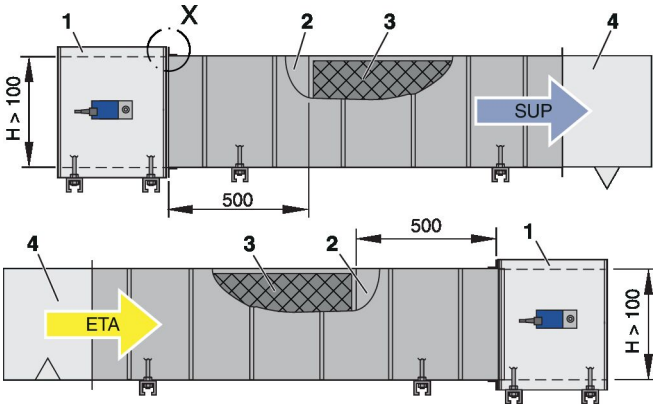

Fig. 13: Installation of sound attenuator TX H =4 in

1 VAV terminal unit
2 Empty chamber (20 in)
3 Splitter
4 Air diffuser (room end)

X Detail ⇨ Fig. 14

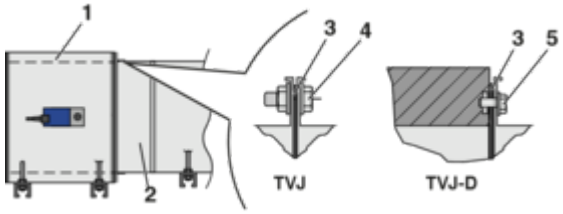

Fig. 14: Detail X: Connection version TVJ without acoustic cladding or TVJ-D with acoustic cladding

1 VAV terminal unit
2 Sound attenuator TX
3 Seal (to be provided by others)
4 4 screws / washers / nuts M8 or M10 (to be provided by others)
5 4 washers / screws / M8 × 16 (to be provided by others)

4.5 Connecting the duct

When connecting the ducting, the customer must ensure that the connection points are installed as airtight as possible in order to avoid negative influences from leakages such as air volume deviations, power consumption, etc. Unless otherwise stated, the connecting material is not included in the supply package.

In the case of one-sided connection of the ductwork, intervention in the damper blade is to be prevented by suitable measures (for example, grilles).

Before connecting the ducting:

- Check the inside of the unit for damage and loose parts.
- Remove any contamination from the ducting.

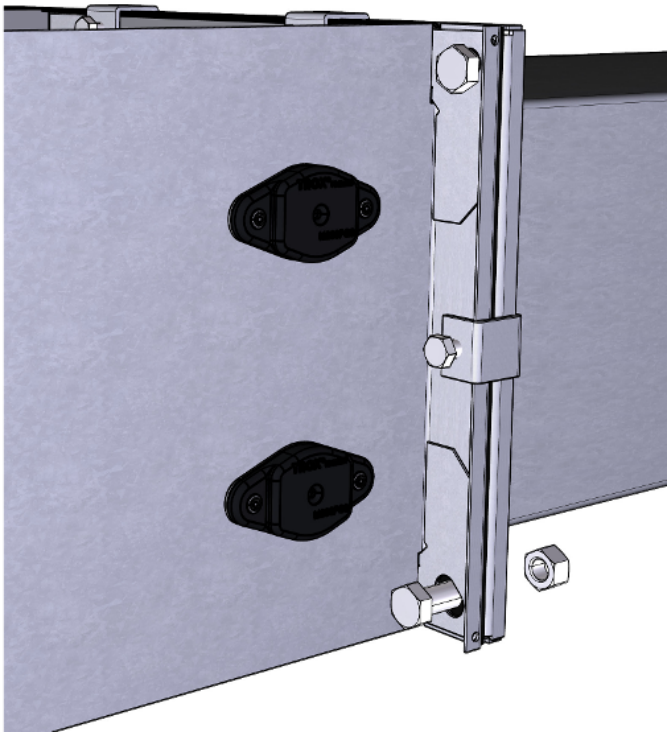

Fig. 15: Flange connection

- Connection to ducting with air duct connections.
- Make sure that the flange seal and screw connection (to be provided by others) are properly installed.
- If necessary, insert additional duct clamps.
- Position the ducting exactly. Do not pull the distances together via the air duct connections.

4.6 Insulation

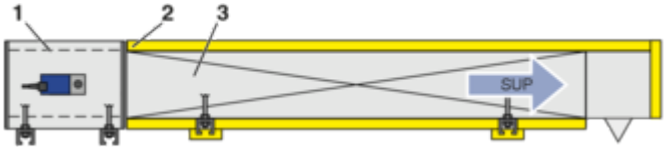

Fig. 16: VAV terminal unit with insulation

For VAV terminal units with acoustic cladding (Fig. 16 /1), run the insulation (Fig. 16 /2) of the room-end ducts (Fig. 16 /3) up to the acoustic cladding (Fig. 16 /1) of the terminal unit.

Retrofitting acoustic cladding

It is not possible to retrofit the factory acoustic cladding to the VAV terminal unit.

5 Electrical connection

5.1 Safety notes

DANGER!

Danger of electric shock! Do not touch any live components. Electrical equipment carries a dangerous electrical voltage.

– Only skilled qualified electricians are allowed to work on the electrical system.
– Before working on the electrical system, switch off the supply voltage and secure it against being switched on again.

5.2 Installation instructions

The VAV terminal unit was manufactured and configured on a project-specific basis. The control components are prewired at the factory. For units with electrical control components, the supply voltage must be connected, and, if necessary, also signal or bus lines must be connected.
The connection is made according to the information on the control components or connection diagrams in the product data sheet or commissioning instructions for the respective control component, *www.troxtechnik.com* .
The voltage ranges and terminal connections specified on the control components must be observed!

Personnel:

- Skilled qualified electrician

Observe the following during installation:

- Legal and official regulations, in particular VDE guidelines.
- Observe the technical connection rules (TCR) of the local grid operator.
- Wiring work for supply voltage and signal lines on site.
- The rating and manufacturing of customer-side connections and wiring must be carried out in accordance with the recognised rules of electrical engineering.
- The responsibility for design, dimensioning and sizing of the electrical and network installations as well as their execution by others lies with the specialist consultant, HVAC contractor and commissioning engineer appointed by the system owner. This includes, in particular, the dimensioning of the power supplies as well as cable types and cross sections.
- For network installations, the specification of the respective network variant must be observed. For information, see here:
  – BACnet MS/TP or BACnet/IP ⇨ *BACnet.org*
  – Modbus RTU or Modbus TCP ⇨ *Modbus.org*
  – KNX bus ⇨ *KNX.org*
  – MP-Bus technology - project planning information ⇨ *www.belimo.com*
- Observe wiring guidelines and project-specific circuit diagrams.
- The electrical connection may only be made after complete installation of the unit.
- For units with a 24 V supply voltage, observe the following:
  – Electrical connection only with safety transformer
  – Make sure that all connected units have the same GND reference point for the supply voltage.
- Suitable wire clamping brackets must be provided for all connecting cables.
- Electronic components contain no parts that can be replaced or repaired by the user and may only be opened by the manufacturer!

6 Commissioning and operation

6.1 Factory preparation

TROX VAV terminal units are prepared, calibrated and tested at the factory. The commissioned operating parameters are set and the volume flow controller is tested with regard to air distribution technology.

The following exceptions apply:

- For VAV terminal units with Easy control components, the operating parameters qv_{min} and qv_{max} must be set on the potentiometer by others (screwdriver required).
- For special versions, parameterisation by others may be necessary.

The factory adjustment is documented on the silver adjustment sticker, *Chapter 3.4.3 'Adjustment sticker' on page 11* .

6.2 Requirement for commissioning

Contamination, e.g. construction dust, can impair the functionality of the VAV terminal unit and cause irreparable damage to units that use a control component with a dynamic differential pressure transducer.

Therefore, the ventilation and air conditioning system and its components may not be put into operation for the first time until the rooms connected to the ventilation system have been cleaned of any contamination resulting from construction work. Contamination of the ventilation system by construction dust and sucked-in dirt particles must be eliminated. In the case of systems that are heavily contaminated due to construction activities, the system may need to be cleaned before commissioning.

6.3 Commissioning

Code of good practice for commissioning

Commissioning is governed by the standard "DIN EN 12599 Testing and measuring procedures for the transfer of installed ventilation and air conditioning systems", and, if applicable, contractually agreed services between HVAC contractors, system owners and installation engineers. The standard describes the essential commissioning steps of the completeness check, function check, function measurement as well as report generation and handover.

6.3.1 Installation and connection

Once the electrical or pneumatic connections have been correctly installed and made, the VAV terminal unit is ready for operation.

6.3.2 Parameterisation by others and settings

Subsequent adjustment of settings

Subsequent adjustments to the volume flow rate operating range may require manufacturer-specific adjustment devices or PC software, depending on the control component.

Network integration

Bus-compatible control components may require integration into the building's network infrastructure to be performed by others (network commissioning, e.g. setting the subscriber address and communication parameters). Manufacturer-specific tools such as adjustment devices or software packages and associated interface adapters may be required for this.

Special constructions

VAV terminal units without standardised control components (e.g. special versions) may require parameterisation or network integration to be performed by others. Manufacturer-specific tools such as adjustment devices or software packages and associated interface adapters may be required for this.

6.3.3 Control components for duct pressure control

- with integrated differential pressure transducer:
  - Prepare the duct pressure sampling point (duct pressure sampling set) and establish the tubing to the control component.
- with separate differential pressure transducer (only with TROX UNIVERSAL or EASYLAB):
  - Install differential pressure transducer for duct pressure measurement. Prepare duct pressure sampling point (duct pressure sampling set) and establish tubing to the differential pressure transducer.
  - Connect the duct pressure actual value signal of the differential pressure transducer to the control component.
  - During commissioning, carry out the characteristic setting in order to inform the pressure control circuit of the characteristics of the external transducer, e.g. nominal pressure/working range and signal characteristics. The EasyConnect software is required for setting.

6.3.4 Control components for room pressure control

- with integrated differential pressure transducer:
  - Carefully select the measuring point for room pressure and connect the tubing to the control component.
- with separate differential pressure transducer (only with TROX UNIVERSAL or EASYLAB):
  - Install differential pressure transducer for room pressure measurement. Carefully select the measuring point for room pressure and connect the tubing to the differential pressure transducer.
  - Connect the room pressure actual value signal of the differential pressure transducer to the control component.
  - During commissioning, carry out the characteristic setting in order to inform the pressure control circuit of the characteristics of the external transducer, e.g. nominal pressure/working range and signal characteristics. The EasyConnect software is required for setting.

6.3.5 Functional test

Prerequisites for the functional test

- VAV terminal unit has been correctly installed in the ducting system:
  - Airflow direction, according to airflow direction arrows *Chapter 3.4.1 'Rating plate' on page 11*
  - Upstream conditions correct, *Chapter 4.2 'General installation information' on page 13*
  - Correct installation orientation, *Chapter 4.2 'General installation information' on page 13*
- Electrical or pneumatic connections have been correctly installed and tested.
- Ventilation and air conditioning system is in operation (fans running).
- Air circulation is guaranteed (shut-off dampers and fire dampers are open).
- Supply voltage or the compressed air supply is switched on.
- Measuring hoses between differential pressure sensor and control component or pressure transducer are undamaged and kink-free.

1. Check installation orientation and carry out zero point correction, see instructions for the control component.

> ***Installation orientation and zero point correction***
>
> *Only required for control components with static diaphragm pressure transducer. Control components with static diaphragm pressure transducers can be identified by the installation orientation sticker,* *Chapter 4.2.2 'Installation orientation' on page 14 .*

2. Compare volume flow rate actual value signal with setpoint value signal. The setpoint value signal can be variable or constant, depending on the intended application.
3. Check damper blade positions:
   - Damper blade in control position
   - Door open
   - Door closed
4. Check override control functions
5. Further function tests on the VAV terminal unit can only be carried out if it is known which control component has been fitted.

   Information on this can be found in the documentation of the TROX control components or in the product information of the control component manufacturer.

6.4 Operation

Once commissioning has been completed, the VAV terminal unit will operate in a self-powered manner and require no intervention from the system owner.

Depending on the area of application of the VAV terminal unit, test specifications and intervals may have to be observed; for example, when used on fume cupboards, an annual functional test must be carried out and documented.

In case of a malfunction, decommission the VAV terminal unit and have it repaired before commissioning it again.

6.5 Volume flow rate measurement

For testing the volume flow rate or differential pressure-transducer, the differential pressure Δp_w (differential pressure) can be measured directly at the differential pressure sensor of the VAV terminal unit by means of a pressure gauge.

Attention: During the measurement, the actuator of the control component must be switched off, e.g. via a special function of a service tool or by switching off the supply voltage. Otherwise, a comparison measurement will be influenced by changing blade positions from the control process.

The connection for the pressure gauge must be selected depending on the attachment and transducer type (dynamic or static) of the fitted control component:

Dynamic - Pressure measurement only directly at the differential pressure sensor of the terminal unit (parallel measurement can falsify the result).

Static - Parallel measurement to the hose-connected transducer of the control component is permitted.
The tapping can be done on T-pieces that are factory-installed in the measuring hoses.

Alternative measurement point

Differential pressure measurement directly in the ducting as an alternative to the differential pressure sensor of the terminal unit requires a high degree of expertise and experience.

For sufficiently reliable differential pressure measurement results, a complex network measurement (gravity line method) and a final error propagation calculation in accordance with EN 12599 must be adhered to for the purposes of objective comparability.

Note: Comparative measurements without taking the above-mentioned framework conditions into account are not helpful. Such measurements are inaccurate and cannot be used for complaints.

6.5.1 Volume flow rate calculation

The volume flow rate is calculated according to the following formula:

$$q_v = C \times \sqrt{\Delta p_w} \qquad [l/s]$$

$$q_v = C \times \sqrt{\Delta p_w} \times 3{,}6 \qquad [m^3/h]$$

Fig. 17: Calculation of the volume flow rate

q_v Volume flow rate
Δp_w Measured effective pressure in Inches of Water Gauge [in. w.g.]
C Unit constant for air density ρ = 0.07 lb/ft³

It should be noted that the volume flow rate determined depends on the current flow conditions in the ducting and that the measurement only corresponds to an instantaneous value without any averaging.

6.5.2 C values

Type	B [in.]	H [in.]	C value [1)]
TVJ	7.87	3.94	15.17
TVJ	11.81	3.94	22.75
TVJ	15.75	3.94	30.34
TVJ	19.69	3.94	37.92
TVJ	23.62	3.94	45.50
TVJ	7.87	7.87	30.34
TVJ	11.81	7.87	45.50
TVJ	15.75	7.87	60.67
TVJ	19.69	7.87	75.84
TVJ	23.62	7.87	91.01
TVJ	27.56	7.87	106.17
TVJ	31.50	7.87	121.34
TVJ	11.81	11.81	74.51
TVJ	15.75	11.81	99.35
TVJ	19.69	11.81	124.19
TVJ	23.62	11.81	149.03
TVJ	27.56	11.81	173.86
TVJ	31.50	11.81	198.70
TVJ	35.43	11.81	223.54
TVJ	39.37	11.81	248.38
TVJ	15.75	15.75	138.03
TVJ	19.69	15.75	172.54
TVJ	23.62	15.75	207.05
TVJ	27.56	15.75	241.55
TVJ	31.50	15.75	276.06
TVJ	35.43	15.75	310.57
TVJ	39.37	15.75	345.08
TVJ	19.69	19.69	200.03
TVJ	23.62	19.69	240.03
TVJ	27.56	19.69	280.04
TVJ	31.50	19.69	320.04
TVJ	35.43	19.69	360.05
TVJ	39.37	19.69	400.06
TVJ	23.62	23.62	298.05
TVJ	27.56	23.62	347.73
TVJ	31.50	23.62	397.40
TVJ	35.43	23.62	447.08
TVJ	39.37	23.62	496.76
TVJ	27.56	27.56	415.42
TVJ	31.50	27.56	474.76
TVJ	35.43	27.56	534.11
TVJ	39.37	27.56	593.46

[1)] C value in relation to l/s, (for air density 0.07 lb/ft³ at 68 °F)

Type	B [in.]	H [in,]	C value [1)]
TVJ	31.5	31.5	552.12
TVJ	35.43	31.5	621.14
TVJ	39.37	31.5	690.16
TVJ	35.43	35.43	708.17
TVJ	39.37	35.43	786.86
TVJ	39.37	39.37	883.56

[1)] C value in relation to l/s, (for air density 0.07 lb/ft³ at 68 °F)

7 Maintenance

7.1 System owner's responsibility

WARNING!

Only authorised specialist personnel are allowed to perform the described maintenance measures.

The system owner is responsible for maintenance. The system owner is responsible for creating a maintenance plan, for defining the maintenance goals, and for the functional reliability of the equipment.

The legal regulations must be observed during maintenance, e.g. the system owner is responsible for hygienic operation in accordance with VDI 6022.

7.2 Maintenance

The VAV terminal unit, the actuator and the control components are maintenance-free with regard to wear, but the VAV terminal unit must still be included in the regular cleaning of the ventilation system. Regular care and maintenance ensure operational readiness, functional reliability, and long service life of the VAV terminal unit.

7.3 Inspection measures

DANGER!

Danger of electric shock! Do not touch any live components. Electrical equipment carries a dangerous electrical voltage.

- Only skilled qualified electricians are allowed to work on the electrical system.
- Before working on the electrical system, switch off the supply voltage and secure it against being switched on again.

CAUTION!

Crushing hazard.

The damper blade may suddenly open or close.

Switch off the voltage supply before you start working on the unit.

Personnel:

- Skilled qualified electrician

Protective equipment:

- Safety shoes

1. Remove any contamination that affects the function of the VAV terminal unit, especially around sensor tubes or measuring probes.
2. Check all screws for firm seating and retighten them, if necessary.
3. Check electrical feeder cables for damage and firm seating in the terminals.
4. Adjust the zero point of the differential pressure transducer, see the documentation for the electronic control component.

   Zeroing

   Only required for control components with static diaphragm pressure transducer. Control components with static diaphragm pressure transducers can be identified by the installation orientation sticker *Chapter 4.2.2 'Installation orientation' on page 14 .*

5. Test the functions of the closed circuits (including volume flow rate) and, if necessary, correct the set operating parameters.
6. Check if the measured values are plausible.
7. Check special functions (override controls, alarm suppression on monitoring systems) and make corrections, if necessary.
8. Check sequence control functions (room balancing) and make corrections, if necessary.
9. Document maintenance measures and measurement results.

7.4 Repair

Repair work is only allowed to be carried out by specialist personnel or by the manufacturer. Only genuine replacement parts must be used.

7.5 Maintenance service

Regular maintenance by the TROX Technical Service is recommended in order to ensure operational readiness, functional reliability, and long service life of the unit.

The TROX Technical Service can establish the actual condition of the unit, adapt or correct it if necessary, and ensure that the unit is in proper condition after maintenance.

Necessary adjustments and parameter setting can be conducted as part of maintenance so that a high level of safety is always maintained.

8 Faults

8.1 Troubleshooting

To troubleshoot the problem, check and log the following points. Take appropriate action if necessary. In case of inquiries to TROX Service, please send the fault log.

System/area:	
TROX VAV terminal unit type (see adjustment sticker):	
Control component (see adjustment sticker):	
Operating mode (see adjustment sticker):	
Complete order code (see name plate):	

Description	Yes	No	Not applicable
Installation situation			
▪ Accessibility to the VAV terminal unit and the control component sufficient?	☐	☐	☐
▪ Specified airflow direction maintained? *↳ Chapter 4.2 'General installation information' on page 13*	☐	☐	☐
▪ Required upstream section maintained? *↳ Chapter 4.2 'General installation information' on page 13*	☐	☐	☐
▪ Are the specified distances to other ventilation components, such as sound attenuators, fire dampers and heat exchangers, observed? *↳ Chapter 4.2 'General installation information' on page 13*	☐	☐	☐
▪ Differential pressure measuring hoses undamaged and kink-free?	☐	☐	☐
▪ Installation position of control component observed? Depending on the transducer type of the control component (observe the installation position sticker) *↳ Chapter 4.2 'General installation information' on page 13*	☐	☐	☐
System readiness			
▪ Fan switched on?	☐	☐	☐
▪ Sufficient pre-pressure available at the VAV terminal unit, i.e. minimum differential pressure complied with in accordance with the data sheet?	☐	☐	☐
▪ Fire dampers/shut-off devices opened in the duct section?	☐	☐	☐
Check control component (for additional details, see commissioning instructions for control components)			
▪ Error-free wiring and supply voltage within tolerance zone?	☐	☐	☐
▪ Characteristic curve of the setpoint value control matching the control component or its set characteristic curve parameterisation? Example: Operating mode V2 = characteristic 2-10 V DC; also see silver adjustment sticker and product data sheets of the control components	☐	☐	☐
▪ Zero point correction performed on control components with static transducer? Only required for control components TUN, TUNF, TUS, TUSD, ELAB.	☐	☐	☐
▪ If necessary, adapt the actuators again (only required for certain control components)	☐	☐	☐

Description	Yes	No	Not applicable
Check control operation			
▪ Setpoint control within the control range of the VAV terminal unit and its control component. If the setpoint value is not reached from the control mode, check whether an override control (Closed, q_{vmin}, qv_{max}, Open) suppresses the normal control mode via setpoint signal.	☐	☐	☐
▪ Check the operating point at q_{vmin}; if necessary, temporarily disconnect the external setpoint value specification to prevent the influence of the external control and only check the controller itself at the operating point q_{vmin}.	☐	☐	☐
▪ Check the operating point at q_{vmax}; check the direction of rotation of the damper in each case.	☐	☐	☐
▪ Check damper position to setpoint, detection of damper position, *Chapter 3.3 'Display of the damper blade position' on page 11* – If the damper is fully open, the setpoint value is not reached. This is an indicator for an inadequate differential pressure. – If the damper is completely closed, although control operation is actually expected, a priority control may have been activated that overrides the control process. Here, too, the function can be verified at the operating point q_{vmin} when the entire circuitry is removed (with the exception of the power supply)	☐	☐	☐
Especially for VAV terminal units for duct pressure control			
▪ Has a pressure measuring point in the duct been selected that is as stable as possible?	☐	☐	☐
▪ Has the duct pressure tap been installed in the duct and is the tubing to the transducer present?	☐	☐	☐
▪ Does the pressure reference measurement take place in a pressure-stable range?	☐	☐	☐
Especially for VAV terminal units for room pressure control			
▪ Is the cross-section of the pressure measurement line sufficient? (Especially with ring lines for recording the reference pressure)	☐	☐	☐
▪ Are pressure-controlled rooms sufficiently leakproof?	☐	☐	☐
▪ Do pressure-controlled rooms have sufficient air transfer (at least 10% of the total extract air)?	☐	☐	☐
▪ Were all doors and seals installed for adjustment? Holes and walls are sealed?	☐	☐	☐
▪ Does the pressure reference measurement take place in a pressure-stable range?	☐	☐	☐

Room situation (pressure conditions and air transfer behaviour).

The overall situation in the room depends on many factors, in particular:

- Supply air volume flow rates and their tolerance zone
- Extract air volume flow rates and their tolerance zone
- Leaktightness of the room or size of air transfer openings
- Type of control components used (control speed) and their control
- Type of the selected leading control concept, control based on volume flow rate or pressure

Note:
Note: The planning concept – and not the individual VAV terminal unit – is decisive for achieving compliance with the desired room situation. Even if the technical data of the installed air terminal units is complied with, the desired room situation can only be achieved if the necessary components have been selected during the design phase, taking into account the requirements.

9 Decommissioning

If the unit is no longer used, it has to be removed and disposed of in an environmentally friendly manner.

9.1 Safety

Personnel

- Disassembly must only be carried out by specialist personnel.
- Only skilled qualified electricians must work on the electrical system.

Electrical system

DANGER!

Danger of death due to electric current!

Danger of electric shock! Do not touch any live components! Live electrical components may suddenly move uncontrollably and seriously injure people.

Therefore:

– Switch off the power supply and disconnect the product permanently before you begin to disassemble it.

WARNING!

Risk of injury due to incorrect disassembly

Stored residual energy, pointed parts and parts with sharp edges or corners on the unit or on tools can cause injuries. Therefore:

Therefore:

– Before you start, make sure that there is sufficient clearance for the work you have to complete.
– Be careful when you touch parts that have sharp edges or corners.
– Disassemble components professionally. Be aware that some components are very heavy. Use lifting gear if necessary.
– Secure components to prevent them from falling or toppling.
– When in doubt, contact the manufacturer.

9.2 Disassembly

Before you start disassembly:

- Switch off the unit and secure it against being switched on accidentally.
- Physically disconnect the unit from the power supply and discharge any residual energy.
- Remove and dispose of any operating fluids, auxiliary materials and leftover processing materials in an environmentally sound manner.

Then professionally clean subassemblies and components and disassemble them in compliance with local occupational safety and environmental protection regulations.

9.3 Disposal

If no take back (disposal) agreement is in place, the various parts should be recycled:

- Scrap the metals.
- Take plastic parts to be recycled.
- Dispose of other components in a suitable manner, i.e. depending on their material properties.

ENVIRONMENT!

Risk of harm to the environment due to improper disposal!

Electronic waste, electronic components, lubricating and other auxiliary materials are hazardous waste and must be disposed of by a specialist company.

If you are not sure how to dispose of anything in an environmentally friendly manner, contact your local authorities or a specialist disposal company.

10 Technical data

10.1 General data

Nominal sizes	8 × 4 to 40 × 40 in.
Volume flow rate range	89 – 36,497.49 cfm
Volume flow rate control range (controller with dynamic differential pressure measurements)	Approx. 20 – 100% of the nominal volume flow rate
Minimum differential pressure	Up to 0.44 in. w.g. (without secondary silencer)
Maximum differential pressure	4.01 in. w.g.
Operating temperature	50 – 122 °F

10.2 Control component/attachments

The following control components are available for the VAV terminal unit TVJ:

VARYCONTROL control components

Attachment	Controlled variable	Interface	Effective pressure transducer	Actuator	Make
Easy controller – dynamic					
Easy	qv	0 – 10 V	Integrated	Slow-running, integrated	①
Compact controller – dynamic					
BC0	qv	▪ 0 – 10 V or 2 – 10 V ▪ MP bus	Integrated	Slow-running, integrated	②
BM0	qv	▪ 0 – 10 V or 2 – 10 V ▪ MP bus ▪ Modbus RTU ▪ BACnet MS/TP			②
BM0-J6	qv	▪ Modbus RTU ▪ BACnet MS/TP with ▪ RJ12 socket (for X-AIRCONTROL)			②
XB0	qv	0 – 10 V or 2 – 10 V			①
LN0	qv				⑤
LK0	qv	KNX			⑤
Compact controller – static					
XD0	qv	0 – 10 V or 2 – 10 V	Integrated	Slow-running, integrated	③
XF0	Δp		Integrated, control range adjustable, 25 – 550 Pa		③
SB0N	qv, Δp	▪ 0 – 10 V or 2 – 10 V ▪ BACnet MS/TP ▪ SLC	Integrated		⑥
SB0S	qv, Δp			Fast-running, integrated	⑥
VARYCONTROL universal controller – dynamic					

Volume flow rate qv, differential pressure Δp
① TROX, ② TROX/Belimo, ③ TROX/Gruner, ⑤ Siemens, ⑥ Sauter

Attachment	Controlled variable	Interface	Effective pressure transducer	Actuator	Make
BUDN	qv	▪ 0 – 10 V or 2 – 10 V ▪ MP bus ▪ Modbus RTU ▪ BACnet MS/TP	Integrated	Slow-running, separate	②
BUDNF	qv			Spring return actuator, separate	②
XB4	qv	0 – 10 V or 2 – 10 V			③
VARYCONTROL universal controller – static					
BUPN	Δp	▪ 0 – 10 V or 2 – 10 V ▪ MP bus ▪ Modbus RTU ▪ BACnet MS/TP	Integrated, control range adjustable, 0.1 – 1.81 in. w.g.	Slow-running, separate	②
BURNF	Δp		Integrated, control range adjustable, -0.2 ... -0.04 or 0.04 ... 0.2 in. w.g.	Spring return actuator, separate	②
BURN	Δp			Slow-running, separate	②
BUPNF	Δp		Integrated, control range adjustable, 0.1 – 1.81 in. w.g.	Spring return actuator, separate	②
BUSN	qv		Integrated	Slow-running, separate	②
BUSNF	qv			Spring return actuator, separate	②
BUSS	qv			Fast-running, separate	②
XD4	qv	0 – 10 V or 2 – 10 V		Spring return actuator, separate	③
XF4	Δp		Integrated, control range adjustable, 0.1 – 2.21 in. w.g.		③

Volume flow rate qv, differential pressure Δp
① TROX, ② TROX/Belimo, ③ TROX/Gruner, ⑤ Siemens, ⑥ Sauter

TROX UNIVERSAL control components

Attachment	Controlled variable	Interface	Effective pressure transducer	Actuator	Make
TROX UNIVERSAL controller – static					
TUN	qv, Δp	▪ TROX plug and play communication system ▪ 0 – 10 V or 2 – 10 V ▪ with optional accessories: – Modbus – BACnet – Web server	qv = integrated, Δp = separate	Slow-running, separate	①
TUNF	qv, Δp			Spring return actuator, separate	①
TUS	qv, Δp			Fast-running, separate	①
TUSD	qv, Δp			Fast-running with digital communication interface (TROX HPD), separate	①

Volume flow rate qv, differential pressure Δp
① TROX

LABCONTROL EASYLAB control components

Attachment	Controlled variable	Interface	Effective pressure transducer	Actuator	Make
EASYLAB controller – static					
ELAB	qv, Δp *	▪ TROX plug and play communication system ▪ 0 – 10 V or 2 – 10 V ▪ with optional accessories: – Modbus – BACnet – Web server	qv = integrated, Δp= separate	▪ Fast-running, separate ▪ Fast-running with digital communication interface (TROX HPD), separate	①

Volume flow rate qv, differential pressure Δp
③ TROX

*Application: Room supply air (qv), room extract air (qv), room pressure (Δp), individual controller (qv)

VARYCONTROL control components (control components no longer available)

Attachment	Controlled variable	Interface	Effective pressure transducer	Actuator	Make
Compact controller – dynamic					
BL0 *	qv	LonWorks FTT 10	Integrated	Slow-running, integrated	②
Compact controller – static					
SA0*	qv, Δp	▪ 0 – 10 V or 2 – 10 V ▪ SLC	Integrated	Slow-running, integrated	⑥
SC0*	qv, Δp			Fast-running, integrated	⑥
VARYCONTROL universal controller – dynamic					
B13 *	qv	0 – 10 V or 2 – 10 V	Integrated	Slow-running, separate	②
B1B *	qv			Spring return actuator, separate	②
VARYCONTROL universal controller – static					
BP3 *	qv	▪ 0 – 10 V or 2 – 10 V ▪ MP bus	Individual component	Slow-running, separate	②
BPB *	qv			Spring return actuator, separate	②
BPG *	qv			Fast-running, separate	②
BB3 *	qv	2 – 10 V		Slow-running, separate	②

* Control component has been discontinued
Volume flow rate qv, differential pressure Δp
① TROX, ② TROX/Belimo, ③ TROX/Gruner, ⑤ Siemens, ⑥ Sauter

Attachment	Controlled variable	Interface	Effective pressure transducer	Actuator	Make
BBB *	qv			Spring return actuator, separate	②
BR3 *	Δp	▪ 0 – 10 V or 2 – 10 V ▪ MP bus	Individual component, 0.4 in. w.g.	Slow-running, separate	②
BRB *	Δp			Spring return actuator, separate	②
BRG *	Δp			Fast-running, separate	②
BS3 *	Δp		Individual component, 2.41 in. w.g.	Slow-running, separate	②
BSB *	Δp			Spring return actuator, separate	②
BSG *	Δp			Fast-running, separate	②
BG3 *	Δp	2 – 10 V	Individual component, 0.4 in. w.g.	Slow-running, separate	②
BGB *	Δp			Spring return actuator, separate	②
BH3 *	Δp		Individual component, 2.41 in. w.g.	Slow-running, separate	②
BHB *	Δp			Spring return actuator, separate	②

* Control component has been discontinued
Volume flow rate qv, differential pressure Δp
① TROX, ② TROX/Belimo, ③ TROX/Gruner, ⑤ Siemens, ⑥ Sauter

11 Index

A

Acoustic cladding 18
Adjustment 11
Airflow direction ..... 11 , 14
Application 6
Area of application 6
Attachments 29

C

CE marking 12
Characteristic 11
Checking delivered goods for completeness 9
Circular silencers 13
Commissioning 20
Connecting the air duct 17
Control components 29
Correct use 6
C values 22

D

Damper blade position 11
Dangers 6
Declaration of Conformity 12
Declaration of Incorporation 12
Decommissioning 28
Disassembly 28
Disposal 28
Duct connection 17
Duct pressure control 10

E

Easy 11
Electrical connection
  Installation instructions 19
Electric current 7

F

Faults 25
Fire dampers 13
Fixing 16
Functional description 10
Functional test 21

H

Heat exchanger 13
Hybrid mode 11
Hygiene requirements 7

I

Incorrect use 6
Inspection 24
Installation location 13
Installation orientation 14
Insulation 18

M

Maintenance 24
Minimum differential pressure 29
Misuse 6

N

Nominal volume flow rate 11

O

Operating mode 11
Operating temperature 29
Operation 21
Order code 11
Other applicable documentation 3

P

Packaging 9
Personnel
  Removal 28
Position of the damper blade 11
Product overview 10
Protective equipment 8

Q

QR code 11

R

Rating plate 11
Repair ..... 8 , 24
Replacement parts 8
Residual risks 6
Room pressure control 10

S

Safety 13
Scale sticker 11
Secondary silencer 17
Serial number 11
Service ..... 3 , 24
Signs 6
Sound attenuators 13
  Installation 17
Staff 8
Storage 9
Suspending 16
Symbols 3
System owner 7
System owner's obligations 7

T

Technical data 29
Technischer Service 3
Thermal insulation 18
Transport 9
Transport damage 9

Transport inspection..... 9
Troubleshooting..... 25
TROX Technical Service..... 24

U

Unauthorised use..... 6
Upstream conditions..... 15
Use..... 6

V

Volume flow rate calculation..... 22
Volume flow rate control range..... 11
Volume flow rate measurement..... 21

W

Wiring
    Installation instructions..... 19

TROX® TECHNIK

The art of handling air

TROX GmbH
Heinrich-Trox-Platz
47504 Neukirchen-Vluyn
Germany

+49 (0) 2845 202-0
+49 (0) 2845 202-265
E-mail: trox-de@troxgroup.com
www.troxtechnik.com

© TROX GmbH 2023