Installation manual GB/en

TROX® TECHNIK
The art of handling air

TROX GmbH
Heinrich-Trox-Platz
47504 Neukirchen-Vluyn
Germany
Phone: +49 (0) 2845 2020
Fax: +49 (0) 2845 202-265
E-mail: trox@trox.de
http://www.troxtechnik.com

CAV controllers

RN-Ex

Product overview

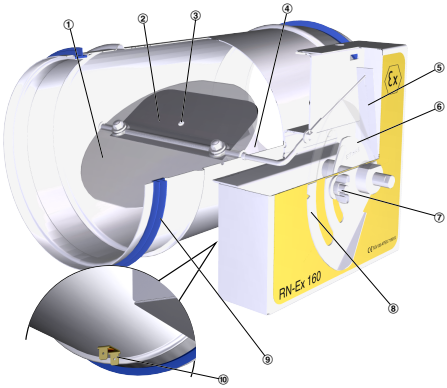

Fig. 1: RN-Ex

① Damper blade
② Bellows
③ Bellows inlet
④ Crossbar
⑤ Leaf spring
⑥ Cam plate
⑦ Volume flow rate scale lock
⑧ Scale
⑨ Lip seal
⑩ Blade connector for equipotential bonding (2 ground straps and 2 blade connectors are part of the supply package)

Important notes

Information on the installation manual

This manual enables operating or service personnel to correctly install the product described below and to use it safely and efficiently.

It is essential that these individuals read and fully understand this manual before starting any work. The basic prerequisite for safe working is to comply with the safety notes and all instructions in this manual.

The local regulations for health and safety at work and general safety regulations also apply.

Correct use

CAV controllers of Type RN-Ex are used for constant volume flow control in ventilation and air conditioning systems. They can be used for supply air and extract air systems in the following areas with potentially explosive atmospheres:

Ex II 2G Ex h IIC T6 Gb

Ex II 2D Ex h IIIC T176 °F Db

Test certificate CE TÜV 05 ATEX 7159 X

Do not use the CAV controller with an electric actuator!

Do not use CAV controllers in extract air systems in commercial kitchens unless the extract air has been cleaned as much as possible with high-sufficiency aerosol separators; see VDI 2052.

The installation of air terminal devices in humid rooms, areas with potentially explosive atmospheres or rooms with dust-laden or aggressive air has to be assessed for each individual case.

A00000063846, 08/2017, © 2017 TROX GmbH

TROX Technical Service

To ensure that your request is processed as quickly as possible, please keep the following information ready:

- Product name
- TROX order number
- Delivery date
- Brief description of the fault

Online	www.troxtechnik.com
Phone	+49 2845 202-400

Qualified staff

HVAC technician for Ex areas
HVAC technicians are individuals who have sufficient professional or technical training in the field they are working in to enable them to carry out their assigned duties at the level of responsibility allocated to them and in compliance with the relevant guidelines, safety regulations and instructions. HVAC technicians are individuals who have in-depth knowledge and skills related to HVAC systems; they are also responsible for the professional completion of the work under consideration.

HVAC technicians are individuals who have sufficient professional or technical training, knowledge and actual experience to enable them to work on HVAC systems, understand any potential hazards related to the work under consideration, and recognise and avoid any risks involved.

HVAC technicians for Ex areas have been specially trained for work in areas with potentially explosive atmospheres. They know the rules and regulations relevant to their work and to explosion protection. Evidence of the relevant experience and training claimed must be available.

Personal protective equipment

Personal protective equipment must be worn for any work in order to reduce health or safety hazards to the minimum.

The appropriate protective equipment for a job must be worn for as long as the job takes.

Industrial safety helmet

Industrial safety helmets protect the head from falling objects, suspended loads, and the effects of striking the head against stationary objects.

Protective gloves

Protective gloves protect hands from friction, abrasions, punctures, deep cuts, and direct contact with hot surfaces.

Safety shoes

Safety shoes protect the feet against crushing, falling parts, and slipping on slippery ground.

Limitation of liability

The information in this manual has been compiled with reference to the applicable standards and guidelines, the state of the art, and our expertise and experience of many years.

The manufacturer does not accept any liability for damages resulting from:

- Non-compliance with this manual
- Incorrect use
- Operation or handling by untrained individuals
- Unauthorised modifications

The actual scope of delivery may differ from the information in this manual for special constructions, additional order options or as a result of recent technical changes.

Transport and storage

Delivery check

Upon delivery, carefully remove the packaging and check the unit for transport damage and completeness. In case of any damage or an incomplete shipment, contact the shipping company and your supplier immediately. Put the product back into its packaging after the delivery check to protect it from dust and contamination.

Fixing and installation material

Fixing and installation material is not part of the supply package (unless stated otherwise), but has to be provided by others; it has to be suitable for the installation situation.

Transport on site

CAUTION!

Danger of injury from sharp edges, sharp corners and thin sheet metal parts!

Sharp edges, sharp corners and thin sheet metal parts may cause cuts or grazes.

– Be careful when carrying out any work.
– Wear protective gloves, safety shoes and a hard hat.

Please note:

- Be careful when unloading or moving the product, and pay attention to the symbols and information on the packaging.
- If possible, take the product in its transport packaging up to the installation location.
- Use only lifting and transport gear designed for the required load.
- Always secure the load against tipping and falling.
- Do not move bulky items just by yourself. Get help to prevent injuries and damage.

Storage

Please note:

- Store the product only in its original packaging
- Protect the product the effects of weather
- Protect the product from humidity, dust and contamination
- Storage temperature: 14 °F to 122 °F.
- Relative humidity: 95% max., no condensation

Packaging

Properly dispose of packaging material.

Technical data

Nominal sizes	3.1 – 15.7 in
Volume flow rate range	23 – 2966 cfm or 40 – 5040 m³/h
Volume flow rate control range	Approx. 25 – 100% of the nominal volume flow rate
Scale accuracy	± 4 %
Minimum differential pressure	.20 in wg (nominal size 3.1: .40 in wg)
Maximum differential pressure	4.02 in wg
Operating temperature	50 – 122 °F

Dimensions and weight

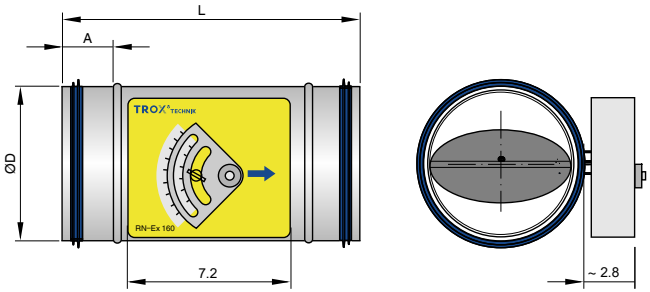

Fig. 2: RN-Ex

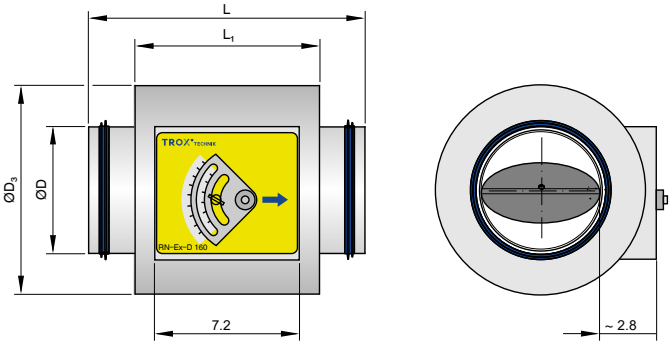

Fig. 3: RN-Ex-D (with acoustic cladding)

Nominal size	ØD	$ØD_3$	L	L_1	A	RN-Ex	RN-Ex-D
	[in]					[lbs]	
3.1	3.1	7.1	12.2	9.1	2.0	3	5
3.9	3.9	7.9				4	8
4.9	4.9	8.7				4	9
6.3	6.3	10.3				6	11
7.9	7.8	11.8				7	13
9.8	9.8	14.0	15.7	12.3		8	16
12.4	12.4	16.5				11	22
15.7	15.7	19.7				13	26

Installation

Upstream conditions

The volume flow rate accuracy of CAV controllers applies to a straight upstream section of the duct. Bends, junctions or a narrowing or widening of the duct cause turbulence that may affect measurement. Duct connections, e.g. branches off the main duct, must comply with EN 1505. Some installation situations require straight duct sections upstream.

Upstream bend, 1D curvature radius

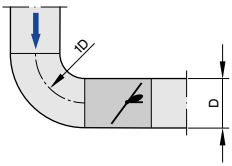

Junction, 1.5 D

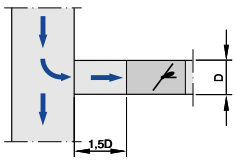

Installation orientation

Any installation orientation. Airflow direction is critical.

Installing the controller

Personnel:

- HVAC technician for Ex areas

Protective equipment:

- Industrial safety helmet
- Protective gloves
- Safety shoes

WARNING!

Risk of explosion from the commissioning of damaged products

Commissioning damaged products in areas with potentially explosive atmospheres may lead to an explosion. This can cause serious or even fatal injuries as well as considerable damage to property.

Before you install the controller, check it for damage that could impair the movement of the damper blade; if the controller has been damaged, replace it.

Before you install the product, take suitable precautions to protect air distribution components from contamination during installation (VDI 6022). If this is not possible, at least cover the product or take other precautions to protect it from contamination. In this case you have to ensure that the product cannot be started. Ensure that all components are clean before you install them. If necessary, clean them thoroughly. If you have to interrupt the installation procedure, protect all openings from the ingress of dust or moisture.

WARNING!

Risk of explosion!

Ignition sources, such as sparks, open flames or hot surfaces, can lead to explosions in an area with potentially explosive atmospheres.

– Get written permission before you start working in an area with potentially explosive atmospheres.
– Do not carry out any work in a potentially explosive atmosphere.
  To remove any potentially explosive atmosphere, purge the system with fresh air before you work on it.
– Use only tools that have been approved for use in areas with potentially explosive atmospheres.

Failure to comply with these safety notes may lead to an explosion.

For installation please note:

- Fix the product only to load-bearing structural elements.
- Load suspension systems only with the weight of the product. Adjacent components and connecting ducts must be supported separately.
- Use only approved and adequately sized fixing material (fixing material is not included in the supply package).
- The product must remain accessible for maintenance even after installation.
- **Important:** If there is a risk that the controller could be subject to mechanical impact during operation, protect it accordingly; protection has to be provided by others.

Be careful to not damage the controller accidentally:

- Handle the unit or device with care.
- Lift the unit or device only by lifting the entire casing.
- Do not lift the unit or device by holding the damper blade only.

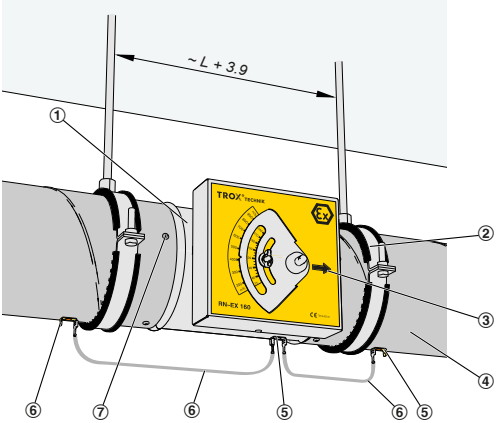

Fig. 4: Installation example

1. ▶ Pre-assemble suspensions (Fig. 4/2) at the installation location, at a distance of approx. L+3.9 in.
2. ▶ Assemble the first duct (Fig. 4/4) and lead it up to the installation location of the controller.
3. ▶ Push the spigot of the CAV controller (Fig. 4/1) into the duct; note the airflow direc-tion marked by the arrow (Fig. 4/3).
4. ▶ Push the second duct (Fig. 4/4) onto the other spigot.
5. ▶ Fix the ducts and the controller to the suspension system.
6. ▶ Fix the controller to the duct using screws or rivets (Fig. 4/7).
7. ▶ Make the equipotential bonding (Fig. 4/5) using ground strap and blade connector (Fig. 4/6).

WARNING!

Risk of explosion!

To prevent electrostatic ignition hazards, make an electrical connection by connecting the controller with the ground straps and blade connectors (part of the supply package) on both sides to the ducting.

It is also possible to connect the controller directly to the terminal point for equipotential bonding of the building. This requires a cable (by others).

In any case, the ductwork has to be connected to the terminal point for equipotential bonding of the building.

Initial commissioning

WARNING!

Risk of explosion from the commissioning of damaged products

Commissioning damaged products in areas with potentially explosive atmospheres may lead to an explosion. This can cause serious or even fatal injuries as well as considerable damage to property.

Before you commission the controller, check it for damage that could impair the movement of the damper blade; if the controller has been damaged, replace it.

Before you start commissioning:

- Ensure that the device or unit has been correctly fixed and connected to the ducting.
- Ensure equipotential bonding of the device or unit.
- Ensure that the devices or units as well as the ventilation system are clean and that there are no residual matter and foreign objects.
- **Important:** If there is a risk that the controller could be subject to mechanical impact during operation, protect it accordingly; protection has to be provided by others.

For commissioning see also VDI 6022, part 1 – 'Hygiene requirements for ventilation and air-conditioning systems and units'.

WARNING!

Risk of explosion!

Ignition sources, such as sparks, open flames or hot surfaces, can lead to explosions in an area with potentially explosive atmospheres.

– Get written permission before you start working in an area with potentially explosive atmospheres.
– Do not carry out any work in a potentially explosive atmosphere.
  To remove any potentially explosive atmosphere, purge the system with fresh air before you work on it.
– Use only tools that have been approved for use in areas with potentially explosive atmospheres.

Failure to comply with these safety notes may lead to an explosion.

Sufficient duct pressure must be ensured for all operating conditions and for all control units. The measurement points for fan speed control must be selected accordingly.

Setting the volume flow rate

▶ Loosen the wing screw (Fig. 1/7) and set the volume flow rate on the scale (Fig. 1/8).

  Lock the scale in the required position with the wing screw (Fig. 1/7).

  No further measurement or adjustment is necessary.

Volume flow rate setting ranges

Nominal size	$\dot{V}$[cfm]		$\dot{V}$(m³/h)	
	min	max	min	max
3.1	23	95	40	162
3.9	47	191	79	324
4.9	74	297	126	504
6.3	127	509	216	864
7.9	191	763	324	1296
9.8	307	1229	522	2088

Nominal size	$\dot{V}$ [cfm]		$\dot{V}$(m³/h)	
	min	max	min	max
12.4	487	1949	828	3312
15.7	742	2966	1260	5040

Maintenance and cleaning

WARNING!

Risk of explosion!

Ignition sources, such as sparks, open flames or hot surfaces, can lead to explosions in an area with potentially explosive atmospheres.

– Get written permission before you start working in an area with potentially explosive atmospheres.
– Do not carry out any work in a potentially explosive atmosphere.

  To remove any potentially explosive atmosphere, purge the system with fresh air before you work on it.
– Use only tools that have been approved for use in areas with potentially explosive atmospheres.

Failure to comply with these safety notes may lead to an explosion.

Maintenance

It is the system owner's duty to set up a maintenance schedule, taking the actual operating conditions (contamination, operating time etc.) of the ventilation system into consideration.

Important: Do not lubricate the bearings of the damper blade.

Maintenance jobs to be carried out regularly:

- Visually check the controller for contamination, damage and corrosion. Remove contamination; if the controller has been damaged, or if there is any corrosion, replace the controller.
- Check the fixing of the controller and of the connected ductwork.
- Check the equipotential bonding.

Replacement parts

Incorrect replacement parts

WARNING!

Risk of injury from the use of incorrect replacement parts!

Incorrect or faulty replacement parts pose a risk to health and safety, and their use can cause malfunction, damage to property and total failure of equipment.

– Use only original replacement parts from TROX.

Cleaning

Please note:

- The cleaning intervals given in the VDI 6022 standard apply.
- Clean surfaces with a damp cloth.
- Use only common household cleaners, do not use any aggressive cleaning agents.
- Do not use cleaning agents that contain chlorine.

Declaration of conformity

TROX® TECHNIK

EG Konformitätserklärung

EC Declaration of conformity
Déclaration de conformité

TROX GmbH
Heinrich-Trox-Platz
D-47504 Neukirchen-Vluyn

Hiermit erklären wir dass die Maschine/Baugruppe
We hereby declare that the machine / module
que le module / la machine

Volumenstromregler Serie RN-Ex; EN-Ex

CAV controller type RN-Ex; EN-Ex
Régulateur de debit série RN-Ex; EN-Ex

Folgenden Richtlinien entspricht:
Complies with the following directives
Est conforme aux directives suivantes

- **Richtlinie 2014/34/EU Anhang III**
  Directive 2014/34/EU annex III
  Directive 2014/34/EU appendice III

Angewandte harmonisierte Normen:
Applied harmonized standards
Normes harmonisées appliquées

- **EN 60079-0:2012+A11:2013, Explosionsgefährdete Bereiche – Teil 0; Betriebsmittel - Allgemeine Anforderungen**
  IEC 60079-0:2011, modified + Cor.:2012 + Cor.:2013; German version EN 60079+-0:2012 + A11:2013
  Explosive atmospheres - Part 0: Equipment - General requirements
  EN 60079-0:2013,version allemande: EN 60079+-0:2012 + A11:2013,
  Atmosphères explosives - matériel - Exigences générales
- **EN ISO 80079-36:2016, Explosionsfähige Atmosphären - Teil 36: Nicht elektrische Geräte für den Einsatz in explosionsfähigen Atmosphären – Grundlagen und Anforderungen**
  ISO 80079-36:2016, Non-electrical equipment for explosive atmospheres - Part 36: Basic method and requirements; German version EN ISO 80079-36:2016
  EN ISO 80079-36:2016, Atmosphères explosives - Partie 36: appareils non électriques destinés à être utilisés en atmosphères explosives - Méthodologie et exigences

Baumusterprüfbescheinigung TÜV 05 ATEX 7159 X
EC type-examination certificate TÜV 05 ATEX 7159 X
Attestation de conformité TÜV 05 ATEX 7159 X

Kennzeichnung:	Ex II 2G Ex h IIC T6 Gb
Marking:	Ex II 2D Ex h IIIC T80°C Db
Identification:	

Neukirchen-Vluyn, 30.06.2017

Jan Heymann

CE-Beauftragter,
Authorised Representative, CE-marked products