Installation manual GB/en

TROX® TECHNIK
The art of handling air

TROX GmbH
Heinrich-Trox-Platz
47504 Neukirchen-Vluyn
Germany
Phone: +49 (0) 2845 202-0
Fax: +49 (0) 2845 202-265
E-mail: trox-de@troxgroup.com
http://www.troxtechnik.com

CAV terminal unit

EN-Ex

Product overview

Fig. 1: EN-Ex

1 Damper blade
2 Bellows
3 Bellows inlet
4 Scales sticker
5 Connection for equipotential bonding (latch) (2 × ground strap in supply package))
6 Display damper blade position ⇨Fig. 2
7 Hand wheel

Damper blade position display

The display is used to evaluate the throttle position of the damper blade, e.g. in order to optimise the control of the fan or the section regulation.
Attention: The display must not be adjusted.

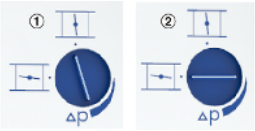

Fig. 2: Display of the damper blade position

1 Damper blade in maximum throttle position - Reduce system pressure
2 Damper blade in open position - System pressure too low

Important notes

Information on the installation manual

This manual enables operating or service personnel to correctly install the product described below and to use it safely and efficiently.

It is essential that these individuals read and fully understand this manual before starting any work. The basic prerequisite for safe working is to comply with the safety notes and all instructions in this manual.

The local regulations for health and safety at work and general safety regulations also apply.

Correct use

CAV terminal units of type EN-Ex are used for constant volume flow control in ventilation and air conditioning systems. They can be used for supply air and extract air systems in the following areas with potentially explosive atmospheres:

Ex II 2G Ex h IIC T6 Gb

Ex II 2D Ex h IIIC T176 °F Db

Do not use the CAV terminal unit with an electric actuator!

In kitchen exhaust air systems, CAV terminal units may only be used if it is ensured that the extract air is cleaned as well as possible by highly effective aerosol separators, observe VDI 2052.

Installation in humid rooms and rooms with dust-laden or aggressive air has to be assessed individually.

A00000074507, 05/2023, © 2017 TROX GmbH

TROX Technical Support

To ensure that your request is processed as quickly as possible, please keep the following information ready:

- Product name
- TROX order number
- Delivery date
- Brief description of defect or issue

Online	www.trox.de
Phone	+49 2845 202-0

Qualified staff

HVAC technician for Ex areas
HVAC technicians are individuals who have sufficient professional or technical training in the field they are working in to enable them to carry out their assigned duties at the level of responsibility allocated to them and in compliance with the relevant guidelines, safety regulations and instructions. HVAC technicians are individuals who have in-depth knowledge and skills related to HVAC systems; they are also responsible for the professional completion of the work under consideration.

HVAC technicians are individuals who have sufficient professional or technical training, knowledge and actual experience to enable them to work on HVAC systems, understand any potential hazards related to the work under consideration, and recognise and avoid any risks involved.

HVAC technicians for Ex areas have been specially trained for work in areas with potentially explosive atmospheres. They know the rules and regulations relevant to their work and to explosion protection. Evidence of the relevant experience and training claimed must be available.

Personal protective equipment

Personal protective equipment must be worn for any work in order to reduce health or safety hazards to the minimum.

The appropriate protective equipment for a job must be worn for as long as the job takes.

Industrial safety helmet

Industrial safety helmets protect the head from falling objects, suspended loads, and the effects of striking the head against stationary objects.

Protective gloves

Protective gloves protect hands from friction, abrasions, punctures, deep cuts, and direct contact with hot surfaces.

Safety shoes

Safety shoes protect the feet against crushing, falling parts, and slipping on slippery ground.

Limitation of liability

The information in this manual has been compiled with reference to the applicable standards and guidelines, the state of the art, and our expertise and experience of many years.

The manufacturer does not accept any liability for damages resulting from:

- Non-compliance with this manual
- Incorrect use
- Operation or handling by untrained individuals
- Unauthorised modifications

The actual scope of delivery may differ from the information in this manual for special constructions, additional order options or as a result of recent technical changes.

Transport and storage

Delivery check

Upon delivery, carefully remove the packaging and check the unit for transport damage and completeness. In case of any damage or an incomplete shipment, contact the shipping company and your supplier immediately. Put the product back into its packaging after the delivery check to protect it from dust and contamination.

Fixing and installation material

Fixing and installation material is not part of the supply package (unless stated otherwise), but has to be provided by others; it has to be suitable for the installation situation.

Transport on site

CAUTION!

Danger of injury from sharp edges, sharp corners and thin sheet metal parts!

Sharp edges, sharp corners and thin sheet metal parts may cause cuts or grazes.

– Be careful when carrying out any work.
– Wear protective gloves, safety shoes and a hard hat.

Please note:

- Be careful when unloading or moving the product, and pay attention to the symbols and information on the packaging.
- If possible, take the product in its transport packaging up to the installation location.
- Use only lifting and transport gear designed for the required load.
- Always secure the load against tipping and falling.
- Do not move bulky items just by yourself. Get help to prevent injuries and damage.
- Only lift or hold the control unit at the housing, not at the damper blade, at the flow rate adjustment or at the actuator.

Storage

Please note:

- Store the product only in its original packaging
- Protect the product from the effects of weather
- Protect the product from humidity, dust and contamination
- Storage temperature: 14 °F to 122 °F.
- Relative humidity: 95% max., no condensation

Packaging

Properly dispose of packaging material.

Technical data

Nominal sizes	7.9 × 3.9 to 23.6 × 23.6 in
Volume flow rate range	83 – 7416 cfm or 140 – 12600 m³/h
Volume flow rate control range	Approx. 25 to 100% of the nominal volume flow rate
Scale accuracy	± 4%
Minimum differential pressure	.20 in wg
Maximum differential pressure	4.02 in wg
Operating temperature	50 – 122 °F

Dimensions and weight

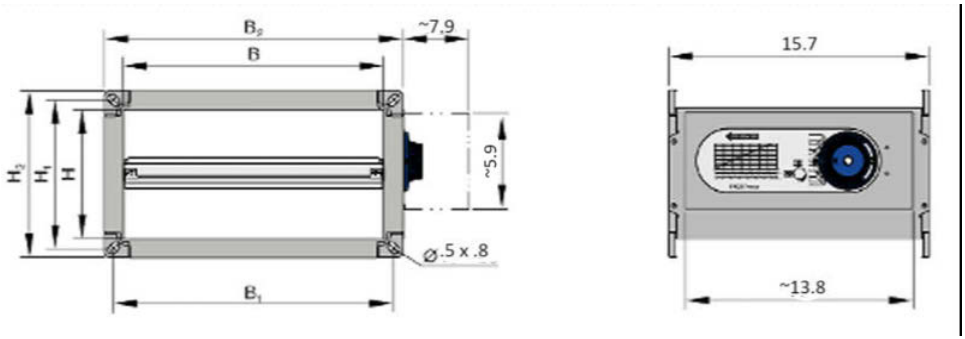

Fig. 3: EN-Ex

Product-specific data for EN-Ex

NS	B	H	B_1	B_2	H_1	H_2	lbs
7.9 × 3.9	7.9	3.9	9.1	10.2	5.1	6.3	9
11.8 × 3.9	11.8	3.9	13.0	14.2	5.1	6.3	11
11.8 × 5.9	11.8	5.9	13.0	14.2	7.1	8.3	13
11.8 × 7.9	11.8	7.9	13.0	14.2	9.1	10.2	13
15.7 × 7.9	15.7	7.9	16.9	18.1	9.1	10.2	15
15.7 × 9.8	15.7	9.8	16.9	18.1	11.0	12.2	18
15.7 × 11.8	15.7	11.8	16.9	18.1	13.0	14.2	19
15.7 × 15.7	15.7	15.7	16.9	18.1	16.9	18.1	29
19.7 × 7.9	19.7	7.9	20.9	22.0	9.1	10.2	19
19.7 × 9.8	19.7	9.8	20.9	22.0	11.0	12.2	20
19.7 × 11.8	19.7	11.8	20.9	22.0	13.0	14.2	21
19.7 × 15.7	19.7	15.7	20.9	22.0	16.9	18.1	32
19.7 × 19.7	19.7	19.7	20.9	22.0	20.9	22.0	34
23.6 × 7.9	23.6	7.9	24.8	26.0	9.1	10.2	22
23.6 × 9.8	23.6	9.8	24.8	26.0	11.0	12.2	23
23.6 × 11.8	23.6	11.8	24.8	26.0	13.0	14.2	25
23.6 × 15.7	23.6	15.7	24.8	26.0	16.9	18.1	37
23.6 × 19.7	23.6	19.7	24.8	26.0	20.9	22.0	40
23.6 × 23.6	23.6	23.6	24.8	26.0	24.8	26.0	44

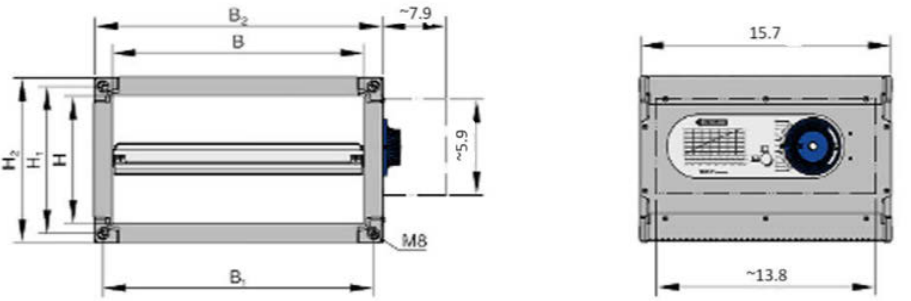

Fig. 4: EN-Ex-D (with acoustic cladding)

Product specific data EN-Ex-D

NS	B	H	B_1	B_2	H_1	H_2	lbs
7.9 × 3.9	7.9	3.9	9.1	10.2	5.1	6.3	14
11.8 × 3.9	11.8	3.9	13.0	14.2	5.1	6.3	18
11.8 × 150	11.8	5.9	13.0	14.2	7.1	8.3	20
11.8 × 7.9	11.8	7.9	13.0	14.2	9.1	10.2	22
15.7 × 7.9	15.7	7.9	16.9	18.1	9.1	10.2	26
15.7 × 250	15.7	9.8	16.9	18.1	11.0	12.2	29
15.7 × 11.8	15.7	11.8	16.9	18.1	13.0	14.2	31
15.7 × 15.7	15.7	15.7	16.9	18.1	16.9	18.1	40
19.7 × 7.9	19.7	7.9	20.9	22.0	9.1	10.2	31
19.7 × 250	19.7	9.8	20.9	22.0	11.0	12.2	32
19.7 × 11.8	19.7	11.8	20.9	22.0	13.0	14.2	34
19.7 × 15.7	19.7	15.7	20.9	22.0	16.9	18.1	45
19.7 × 19.7	19.7	19.7	20.9	22.0	20.9	22.0	49
23.6 × 7.9	23.6	7.9	24.8	26.0	9.1	10.2	34
23.6 × 250	23.6	9.8	24.8	26.0	11.0	12.2	36
23.6 × 11.8	23.6	11.8	24.8	26.0	13.0	14.2	40
23.6 × 15.7	23.6	15.7	24.8	26.0	16.9	18.1	51
23.6 × 19.7	23.6	19.7	24.8	26.0	20.9	22.0	55
23.6 × 23.6	23.6	23.6	24.8	26.0	24.8	26.0	61

Installation

Installation orientation

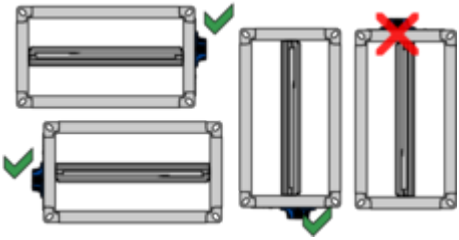

Fig. 5: Installation position for horizontal ducting

Handwheel must not be installed at the top.

Observe the airflow direction!

Upstream conditions

The volume flow rate accuracy of CAV terminal units applies to a straight upstream section of the duct. Bends, junctions or a narrowing or widening of the duct cause turbulence that may affect volume flow rate measurement. Depending on the respective installation situation, information on the straight duct section upstream of the control unit must be observed.
Duct connections, e.g. branches off the main duct, must comply with EN 1505.

Horizontal duct	Vertical duct
Bend 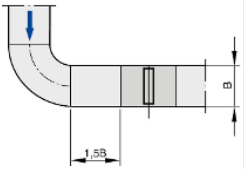	Bend 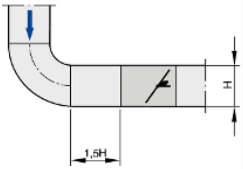
Junction 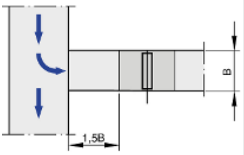	Junction 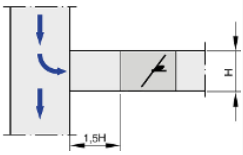

Note: If there is a shut-off damper installed in the flow direction upstream of the EN terminal unit, ensure that the shut-off damper is installed so that its damper blade shaft is located opposite the damper blade shaft of the EN and rotated by 90°.

Inflow at the open duct end (extract air mode)

Fig. 6: Upstream conditions at open duct end

The inflow at the open end of a duct causes strong turbulence. The stated volume flow rate accuracy can only be achieved with a straight upstream length, at least 5B or 5H (use larger dimension).

Alternatively, an inflow aid must be installed at the open line end upstream of the control unit:

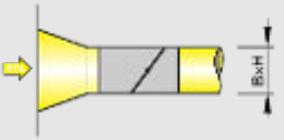

Fig. 7: Upstream conditions with inflow aid

The stated volume flow rate accuracy is achieved when an inflow aid is connected directly to the control unit.

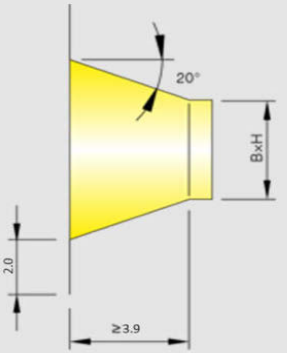

Fig. 8: Dimensions of inflow aid

Attaching sealing tape

To achieve the tightness class of the ducting, sealing tapes have to be installed between the ducting and the terminal unit at both sides of the flange, e.g. self-adhesive sealing tape.

Ensure that the sealing tape (Fig. 9/1) is attached flush with the flange.

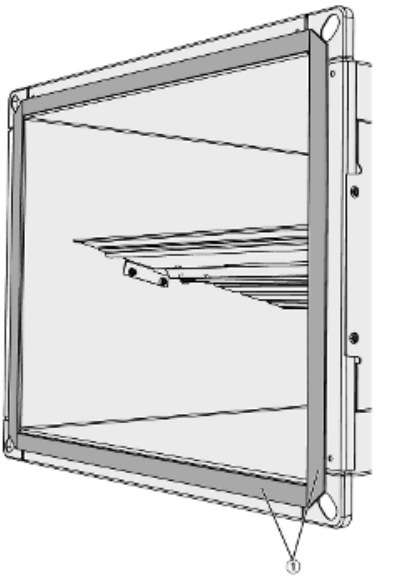

Fig. 9: Attaching the sealing tape to the flange

Installing the CAV terminal unit

Personnel:

- HVAC technician for Ex areas

Protective equipment:

- Industrial safety helmet
- Protective gloves
- Safety shoes

WARNING!

Risk of explosion from the commissioning of damaged products

Commissioning damaged products in areas with potentially explosive atmospheres may lead to an explosion. This can cause serious or even fatal injuries as well as considerable damage to property.

Before you install the terminal unit, check it for damage that could impair the movement of the damper blade; if the terminal unit has been damaged, replace it.

Before you install the product, take suitable precautions to protect air distribution components from contamination during installation (VDI 6022). If this is not possible, at least cover the product or take other precautions to protect it from contamination. In this case you have to ensure that the product cannot be started. Ensure that all components are clean before you install them. If necessary, clean them thoroughly. If you have to interrupt the installation procedure, protect all openings from the ingress of dust or moisture.

WARNING!

Risk of explosion!

Ignition sources, such as sparks, open flames or hot surfaces, can lead to explosions in an area with potentially explosive atmospheres.

- Get written permission before you start working in an area with potentially explosive atmospheres.
- Do not carry out any work in a potentially explosive atmosphere.

  To remove any potentially explosive atmosphere, purge the system with fresh air before you work on it.
- Use only tools that have been approved for use in areas with potentially explosive atmospheres.

Failure to comply with these safety notes may lead to an explosion.

For installation please note:

- Fix the product only to load-bearing structural elements.
- Load suspension systems only with the weight of the product. Adjacent components and connecting ducts must be supported separately.
- Use only approved and adequately sized fixing material (fixing material is not included in the supply package).
- The product must remain accessible for maintenance even after installation.
- **Important:** If there is a risk that the terminal unit could be subject to mechanical impact during operation, protect it accordingly; protection has to be provided by others.

Be careful to not damage the unit accidentally:

- Handle the unit with care.
- Lift the unit only by lifting the entire casing.
- Never lift the unit by the damper blade, rotary knob or hand wheel.

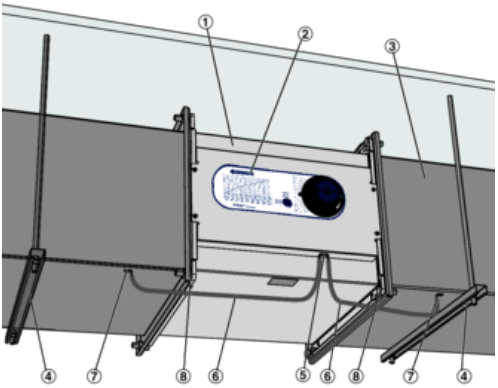

Fig. 10: Installation example

1. ▶ Install suspension rods and bars (Fig. 10/4) at the installation location, at a distance of approx. L+3.9 in.
2. ▶ Assemble the ducts (Fig. 10/3) and lead them up to the installation location of the terminal unit.
3. ▶ Insert seals (Fig. 10/8) between the flanges ↳ *'Attaching sealing tape' on page 8* (by others).

   Observe the air direction arrow (Fig. 10/2) during installation.
4. ▶ Screw the terminal unit (Fig. 10/1) together with screws, washers and nuts M10 (Fig. 10/8).

   For version with acoustic cladding (EN-D)

   - Screw connection (Fig. 10/8) with screws and washers M8;
   - Insulate ducts up to the acoustic cladding of the terminal unit (by others).
5. ▶ If the unit is fitted with acoustic cladding (EN-Ex-D), insulate the ducting up to the control unit's acoustic cladding (on-site).
6. ▶ Fix the ducts and the terminal unit to the suspension system.
7. ▶ Make the equipotential bonding (Fig. 10/6) using ground strap and blade connector (Fig. 10/5).

Use a self-drilling screw (Fig. 10/7) to fix the ground strap to the duct.

WARNING!

Risk of explosion!

To prevent ignition caused by an electrostatic charge, the terminal unit must be connected to the ducting such that it can conduct current on both ends (ground strap part of supply package).

It is also possible to connect the terminal unit directly to the terminal point for equipotential bonding of the building. This requires a cable (by others).

In any case, the ductwork has to be connected to the terminal point for equipotential bonding of the building.

Initial commissioning

WARNING!

Risk of explosion from the commissioning of damaged products

Commissioning damaged products in areas with potentially explosive atmospheres may lead to an explosion. This can cause serious or even fatal injuries as well as considerable damage to property.

Before you commission the terminal unit, check it for damage that could impair the movement of the damper blade; if the terminal unit has been damaged, replace it.

Before you start commissioning:

- Ensure that the device or unit has been correctly fixed and connected to the ducting.
- Ensure equipotential bonding of the device or unit.
- Ensure that the devices or units as well as the ventilation system are clean and that there are no residual matter and foreign objects.
- **Important:** If there is a risk that the terminal unit could be subject to mechanical impact during operation, protect it accordingly; protection has to be provided by others.

For commissioning see also VDI 6022, part 1 – 'Hygiene requirements for ventilation and air-conditioning systems and units'.

WARNING!

Risk of explosion!

Ignition sources, such as sparks, open flames or hot surfaces, can lead to explosions in an area with potentially explosive atmospheres.

- Get written permission before you start working in an area with potentially explosive atmospheres.
- Do not carry out any work in a potentially explosive atmosphere.

  To remove any potentially explosive atmosphere, purge the system with fresh air before you work on it.
- Use only tools that have been approved for use in areas with potentially explosive atmospheres.

Failure to comply with these safety notes may lead to an explosion.

Volume flow rate setting ranges

Nominal size	$\dot{V}$ [cfm]		$\dot{V}$(m³/h)	
	min	max	min	max
7.9 × 3.9	83	347	140	590
11.8 × 3.9	138	551	234	936
11.8 × 5.9	174	975	295	1656
11.8 × 7.9	254	1091	432	1854
15.7 × 7.9	424	1854	720	3150
19.7 × 7.9	381	1907	648	3240
23.6 × 7.9	477	2140	810	3636
15.7 × 9.8	424	1875	720	3186
19.7 × 9.8	498	2521	846	4284
23.6 × 9.8	636	2776	1080	4716
15.7 × 11.8	657	2712	1116	4608
19.7 × 11.8	773	3348	1314	5688
23.6 × 11.8	742	3708	1260	6300
15.7 × 15.7	848	3708	1440	6300
19.7 × 15.7	763	3814	1296	6480
23.6 × 15.7	953	4280	1620	7272
19.7 × 19.7	996	5043	1692	8568
23.6 × 19.7	1271	5551	2160	9432
23.6 × 23.6	1483	7416	2520	12600

Setting the volume flow rate

Sufficient duct pressure must be ensured for all operating conditions and for all control units. The measurement points for fan speed control must be selected accordingly.

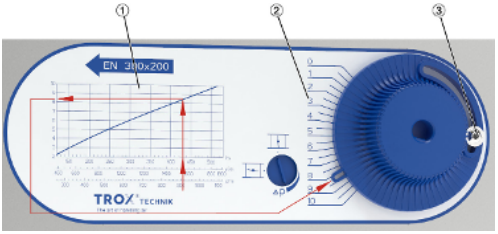

Fig. 11: Setting the volume flow rate

1. ▶ Using the volume flow rate scale (Fig. 11/1), determine the setting value (1-10) for the desired volume flow rate (l/s, m³/h, or cfm).
2. ▶ Loosen the hexagon socket screw (M5x12/ size 3) (Fig. 11/3).
3. ▶ Set the rotary knob to the determined value of the setting scale (Fig. 11/2) and fix it with the hexagon socket screw (Fig. 11/3).

   No further measurement or adjustment is necessary.

Maintenance and cleaning

WARNING!

Risk of explosion!

Ignition sources, such as sparks, open flames or hot surfaces, can lead to explosions in an area with potentially explosive atmospheres.

– Get written permission before you start working in an area with potentially explosive atmospheres.
– Do not carry out any work in a potentially explosive atmosphere.

  To remove any potentially explosive atmosphere, purge the system with fresh air before you work on it.
– Use only tools that have been approved for use in areas with potentially explosive atmospheres.

Failure to comply with these safety notes may lead to an explosion.

Maintenance

It is the system owner's duty to set up a maintenance schedule, taking the actual operating conditions (contamination, operating time etc.) of the ventilation system into consideration.

Important: Do not lubricate the bearings of the damper blade.

Maintenance jobs to be carried out regularly:

- Visually check the terminal unit for contamination, damage and corrosion. Remove contamination; if the terminal unit has been damaged, or if there is any corrosion, replace the terminal unit.
- Check the fixing of the terminal unit and of the connected ductwork.
- Check equipotential bonding.

Replacement parts

Incorrect replacement parts

WARNING!

Risk of injury from the use of incorrect replacement parts!

Incorrect or faulty replacement parts pose a risk to health and safety, and their use can cause malfunction, damage to property and total failure of equipment.

– Use only original replacement parts from TROX.

Cleaning

Please note:

- The cleaning intervals given in the VDI 6022 standard apply.
- Clean surfaces with a damp cloth.
- Use only common household cleaners, do not use any aggressive cleaning agents.
- Do not use cleaning agents that contain chlorine.

Declaration of Conformity

EG Konformitätserklärung

EC Declaration of conformity
Déclaration de conformité

TROX GmbH
Heinrich-Trox-Platz
D-47504 Neukirchen-Vluyn

Hiermit erklären wir, dass die Maschine/Baugruppe
We hereby declare that the machine / module
que le module / la machine

Volumenstromregler Serie EN-Ex ab 01.04.2019

CAV controller type EN-Ex from 01 April.2019
Régulateur de debit série EN-Ex 01.04.2019

Folgenden Richtlinien entspricht:
Complies with the following directives
Est conforme aux directives suivantes

- **Richtlinie 2014/34/EU Anhang III**
  Directive 2014/34/EU annex III
  Directive 2014/34/EU appendice III

Angewandte harmonisierte Normen:
Applied harmonized standards
Normes harmonisées appliquées

- **EN 60079-0:2012+A11:2013, Explosionsgefährdete Bereiche – Teil 0; Betriebsmittel - Allgemeine Anforderungen**
  IEC 60079-0:2011, modified + Cor.:2012 + Cor.:2013; German version EN 60079+-0:2012 + A11:2013
  Explosive atmospheres - Part 0: Equipment - General requirements
  EN 60079-0:2013,version allemande: EN 60079+-0:2012 + A11:2013,
  Atmospheres explosives - matériel - Exigences générales
- **EN ISO 80079-36:2016, Explosionsfähige Atmosphären - Teil 36: Nicht elektrische Geräte für den Einsatz in explosionsfähigen Atmosphären – Grundlagen und Anforderungen**
  ISO 80079-36:2016, Non-electrical equipment for explosive atmospheres - Part 36: Basic method and requirements; German version EN ISO 80079-36:2016
  EN ISO 80079-36:2016, Atmosphères explosives - Partie 36: appareils non électriques destinés à être utilisés en atmosphères explosives - Méthodologie et exigences

Kennzeichnung: Marking: Identification:	Ex II 2G Ex h IIC T6 Gb Ex II 2D Ex h IIIC T80°C Db

Neukirchen-Vluyn, 01.04.2019

i.V. J. Meyer

Jan Heymann

CE-Beauftragter,
Authorised Representative, CE-marked products