Control component

BUSN

Control component with static transducer and separate actuator for VAV terminal units

Universal device for use with VAV terminal units

- Controller and static differential pressure transducer in one casing
- Separate actuator with simple plug connection
- Use in ventilation and air conditioning systems, with clean and contaminated air
- Suitable for constant and variable volume flow rates
- Activation of override controls via external wiring
- Volume flow rates q_{vmin} and q_{vmax} are set in the factory and saved in the controller
- Modification of operating parameters by PC software as well as smartphone and tablet app (TROX FlowCheck app)
- Service access for PC configuration software
- Smartphone access via NFC interface and Bluetooth
- Setpoint value settings, override controls and parameter adjustment via analogue interface or bus communication
- High data transparency through standardised bus communication MP-Bus, Modbus RTU or BACnet MS/TP

General information	2	Variants	6
Function	3	Technical data	8
Specification text	4	Product details	24
Order code	5	Explanation	35

General information

Application

- All-in-one control engineering device for VAV terminal units
- Static differential pressure transducer and control electronics in one casing
- Separate actuator with prefabricated connection plug
- For use with clean and contaminated air
- Suitable for different control tasks depending on the specification of the setpoint value
- The room temperature controller, central BMS, air quality controller or similar units control the variable volume flow control by specifying the setpoint values via a communication interface or analogue signal
- Override controls for activating q_{vmin}, q_{vmax}, shut-off, OPEN position via MP-Bus data points or Modbus/BACnet register or switch/relay possible
- Volume flow rate actual value is available as a network data point or linear voltage signal
- Damper blade position is available as a network data point
- Use TROX FlowCheck app and PC tool to configure the controller and the communication parameters

Control strategy

- The volume flow controller works independent of the duct pressure
- Differential pressure fluctuations do not result in permanent volume flow rate changes
- To prevent the control from becoming unstable, a dead band is allowed within which the damper blade does not move.
- Volume flow rate range in the controller set in the factory
- q_{vmin}: minimum volume flow rate
- q_{vmax}: maximum volume flow rate
- Operating parameters are specified via the order code and set in the factory

Interface

Analogue interface
- Analogue interface with adjustable signal voltage range
- Analogue signal for volume flow rate setpoint
- Analogue signal for actual volume flow rate

Digital communication interface (Bus)
- MP bus
- Modbus RTU, RS485
- BACnet MS/TP, RS485
- Data points, see bus lists

Hybrid mode
- Mixed mode of analogue and digital interface

Factory setting
- Setpoint value setting via analogue interface
- Actual value output via analogue interface and Modbus communication interface

Operating modes

Variable operation (V)
- Setpoint value setting via analogue signal, Modbus, BACnet or MP-BusWork area corresponds to q_{vmin} – q_{vmax}

Constant value mode (F)
- A setpoint signal is not required, setpoint value corresponds to q_{vmin}

Operating parameters

- Volume flow rate range in the controller set in the factory
- q_{vmin}: minimum volume flow rate
- q_{vmax}: maximum volume flow rate
- q_{vmin} = 0 – 100 % of the nominal volume flow rate q_{vnom} adjustable
- q_{vmax}= 20 – 100 % of the nominal volume flow rate q_{venn} adjustable

Signal voltage ranges

- 0 – 10 V DC
- 2 – 10 V DC

Parts and characteristics

- Transducer for static measurement principle
- Separate overload protection
- Plug-in terminal for supply line and controls including cover
- Socket for the actuator
- NFC and service interface
- Release button to allow for manual operation
- Indicator lights for displaying the operating mode
- Addressing key for setting user addresses in bus mode
- Controller casing prepared with 4 openings for threaded connections, 2 cable glands M16x1.5 for connecting cable in the supply package
- Duct pressure tapping setwith duct pressure tapping nipple and measuring hose included in supply package

Construction

BUSN with actuator LM24A-VST for:
- TVR, TZ-Silenzio, TA-Silenzio, TVZ, TVA
- TVRK nominal size 5 - 10

BUSN with actuator NM24A-VST for:
- TVJ
- TVT up to dimensions 39.37 × 11.81 or 31.5 × 15.75
- TVRK nominal size 12 - 16

BUSN with actuator SM24A-VST for:
- TVT from dimensions from 31.5 × 19.69 to 39.37 × 23.62

Commissioning

- Due to the volume flow rates set in the factory, always ensure that the control units are only installed in the specified locations
- Modbus/BACnet/MP bus interface: additional commissioning steps required
- Operating parameters can be adjusted using the TROX FlowCheck app

Useful additions

- TROX FlowCheck app for Android and iOS
- Adjustment device type ZTH-EU (order code AT-VAV-B)
- Belimo PC-Tool
- NFC Bluetooth converter ZIP-BT-NF
- X-AIRCONTROL zone modules for room control

Function

A closed control circuit for regulation of the volume flow rate, i.e. measuring - comparing - adjusting, is characteristic of air terminal units.
The volume flow rate is recorded by measuring a differential pressure (effective pressure). This is done via a differential pressure sensor. An integrated differential pressure transducer converts the effective pressure into a voltage signal. The volume flow rate actual value is available as a voltage signal. The factory setting is such that an actual output signal of 10 V DC always corresponds to the nominal volume flow rate (q_{vnom}).

The volume flow rate setpoint value is specified by a higher-level controller (e.g. room temperature controller, air quality controller, central BMS). Variable volume flow control results in a value between q_{vmin} and q_{vmax}. It is possible to override the room temperature control by override control, e.g. by a complete shut-off of the duct.
The controller compares the volume flow rate setpoint value to the actual value and controls the external actuator accordingly to the system deviation.

Principle of operation Universal controller: TVR, TVJ, TVT, TZ-/TA-Silenzio, TVZ, TVA, TVRK

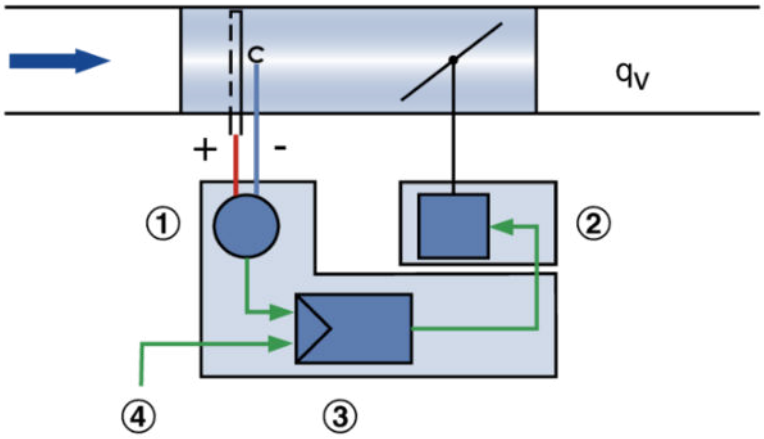

① Differential pressure transducer
② Actuator
③ Volume flow controller
④ Setpoint value signal

Specification text

This specification text describes the general properties of the product.

Category
- Universal controller for volume flow rate

Application
- Regulation of a constant or variable volume flow rate setpoint.
- Electronic controller for connecting a controlled variable and tapping an actual value signal
- The actual value signal relates to the nominal volume flow rate such that commissioning and subsequent adjustment are simplified
- Stand-alone operation or integration in central building management system

Area of application
- Static transmitter for polluted air in ventilation and air conditioning systems

Actuator
- Actuator slow-running; Running time 120 s for 90°

Installation orientation
- Either direction

Connection
- Pluggable connection terminals; no additional terminal box required

Supply voltage
- 24 V AC/DC

Interface/signalling
Analogue signal:
- 0 – 10 V DC or 2 – 10 V DC

Bus interface:
- MP bus
- Modbus RTU
- BACnet MS/TP

Interface information
Analogue signal:
- Volume flow rate setpoint and actual values

Bus interface:
- Volume flow rate setpoint and actual values
- Damper blade position
- Fault status

System connections
MP-Bus for optional extensions
- Suitable for TROX X-AIRCONTROL zone module X-AIR-ZMO-MP
- Gateways for LonWorks, Modbus, BACnet, KNX, e.g. Belimo UK24EIB
- Fan optimiser, e.g. Belimo COU24-A-MP

Modbus RTU for optional extensions
- Suitable for TROX X-AIRCONTROL zone module X-AIR-ZMO-MOD, e.g. in conjunction with X-SENS-SPLITTER

Special functions
- Activation q_{vmin}, q_{vmax}, Closed, Open, Control Stop by means of external switching contacts/wiring or bus communication

Parameter setting
Parameters specific to VAV terminal unit set at the factory
- Operating values q_{vmin}, q_{vmax} factory set
- Signal characteristic factory set

Subsequent adjustment
- Via TROX FlowCheck app (NFC or Bluetooth with optional adapter)
- Via PC software

Factory condition
- Electronic controller factory-mounted on the terminal unit
- Factory parameter settings
- Functional test under air; certified with sticker
- Controller in OPEN position

Order code

TVR – D / 8 / D2 / BUSN / V 0 / qvmin – qvmax cfm

1 2 5 6 7 8 9 10 11

1 Type
TVR VAV terminal unit

2 Acoustic cladding
No entry: none
D with acoustic cladding

3 Material
Galvanised sheet steel (Standard construction)
P1 Powder-coated RAL 7001, silver grey
A2 Stainless steel construction

4 Duct connection

5 Nominal size [in.]
4, 5, 6, 8, 10, 12, 16

6 Accessories
No entry: none
D2 Double lip seal both sides
G2 Matching flanges for both ends

7 Attachments (control component)
BUSN Universal controller with static transducer

8 Operating mode
F Constant value (a setpoint value)
V variable (setpoint value range)

9 Signal voltage range
0 0 – 10 V DC
2 2 – 10 V DC

10 Operating values for factory setting
Volume flow rates in m³/h or l/s
q_{vconst} (only with operating mode F)
q_{vmin} (only with operating mode V)
q_{vmax} (only with operating mode V)

11 Volume flow unit
cfm

Order example: TVR/4/D2/BUSN/V0/29.42-208.36 cfm

Acoustic cladding	None
Material	galvanised sheet steel
Nominal size	4 in.
Accessories	Double lip seal both sides
Attachment	VARYCONTROL Universal controller, static transducer
Signal voltage range	0 – 10 V DC
Operating values	q_{vmin} = 29.42 cfm q_{vmax} = 208.36 cfm

Variants

Universal controller, type VRU-M1-M/B TR

① Adaptation key
② Actuator connection socket
③ NFC interface
④ Dummy cover (not in use)
⑤ Cable glands (separate supply and control)
⑥ Fixing holes
⑦ Connection for effective pressure

Universal controller, type VRU-***-M/B TR (terminal cover opened)

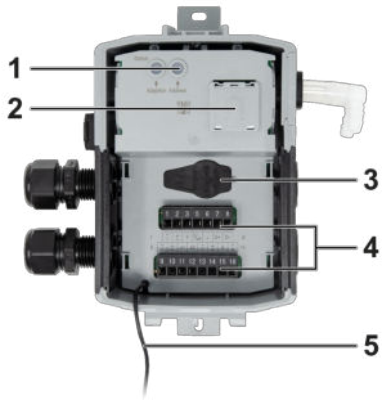

① Addressing key including yellow status LED
② Magnetic holder for ZIP-BT-NFC
③ Service socket
④ Pluggable terminal strips
⑤ Cover fixing (safety cable)

Actuator LM24A-VST TR, 5 Nm

① Clamping device (spindle)
② Casing actuator
③ Gear release button
④ Connecting cable
⑤ Plug connection controller

Actuator NM24A-VST TR, 10 Nm

① Clamping device (spindle)
② Casing actuator
③ Gear release button
④ Connecting cable
⑤ Plug connection controller

Actuator SM24A-VST TR, 20 Nm

① Clamping device (spindle)
② Casing actuator
③ Gear release button
④ Connecting cable
⑤ Plug connection controller

Technical data

Universal controller for VAV terminal units

–	Controllers		Actuator		–
Order code detail	Part number	Type	Part number	Type	**VAV terminal units**
BUSN	A00000073652	VRU-M1-M/B TR	A00000076423	LM24A-VST TR	①
BUSN	A00000073652	VRU-M1-M/B TR	A00000073640	NM24A-VST TR	②
BUSN	A00000073652	VRU-M1-M/B TR	A00000073642	SM24A-VST TR	③

①
- TVR, TZ-Silenzio, TA-Silenzio, TVZ, TVA
- TVRK nominal size 5 - 10

②
- TVJ, TVT up to dimensions of 39.37 × 11.81 or 31.5 × 15.75
- TVRK nominal size 12 - 16

③ TVT dimensions from 31.5 × 19.69 to 39.37 × 23.62

Universal controller, type VRU-M1-M/B TR

Universal controller, type VRU-M1-M/B TR

Type of measurement/installation orientation	static measuring principle, position-independent
Nominal voltage	AC/DC 24 V
Rated voltage frequency	50/60 Hz
Functional range	AC 19.2 – 28.8 V/DC 21.6 – 28.8 V
Power consumption (when running/when idle)	1.5 W
Power requirement dimensioning	2 VA plus connected VST drive
Power consumption dimensioning note	I_{max} 20 A @ 5 ms
Drive connection	AC/DC supply through controller, PP-Link VST drive
Bus connection	**Modbus RTU*,** BACnet MS/TP, MP-Bus
Modbus RTU communication parameters to be set	Baud rate: 9600, 19200, **38400***, 76800, 115200; Address: **1***,2.3 – 247; Parity: **1-8-N-2***, 1-8-N-1, 1-8-E-1, 1-8-O-1; Number of nodes: maximum 32 (without repeater) Terminal resistor: 120 Ω, integral, can be activated
BACnet MS/TP communication parameters to be set	Baud rate: 9600, 19200, **38400***, 76800, 115200; Address: **1***,2.3 – 127; Number of nodes: maximum 32 (without repeater) Terminating resistor: 120 Ω; integrated, switchable
Addressing	Required on site: by smartphone app
Setpoint value signal input (analogue optional)	0 - 10 V DC, 2 - 10 V DC Input resistance 100 kΩ
Actual value signal output	0 - 10 V, 2 - 10 V, maximum 0.5 mA
Protection class IEC/EN	III (Protective extra-low voltage)
Protection level	IP 42
EMC	CE according to 2014/30/EU
Weight	0.66 lbs

* Factory setting.

Actuator LM24A-VST TR

Actuator LM24A-VST TR

Power supply	from the controller
Power consumption – when running	1 W
Power requirement dimensioning	2 VA
Self-consumption (idle state)	0.4 W
Torque	5 Nm
Run time for 90°	120 s/90°
Setpoint value signal input	from the controller
IEC protection class	III (Protective extra-low voltage)
Protection level	IP 54
EMC	EMC to 2014/30/EU
Weight	1.23 lbs

Actuator NM24A-VST TR

Actuator NM24A-VST TR

Power supply	from the controller
Power consumption – when running	2 W
Power requirement dimensioning	4 VA
Self-consumption (idle state)	0.4 W
Torque	10 Nm
Run time for 90°	120 s/90°
Setpoint value signal input	from the controller
IEC protection class	III (Protective extra-low voltage)
Protection level	IP 54
EMC	EMC to 2014/30/EU
Weight	1.72 lbs

Actuator SM24A-VST TR

Actuator SM24A-VST TR

Power supply	from the controller
Power consumption – when running	2 W
Power requirement dimensioning	4 VA
Self-consumption (idle state)	0.4 W
Torque	20 Nm
Run time for 90°	120 s/90°
Setpoint value signal input	from the controller
IEC protection class	III (Protective extra-low voltage)
Protection level	IP 54
EMC	EMC to 2014/30/EU
Weight	2.16 lbs

Meaning of the green status LED/push button (applies to all VRU control components)

LED/push button (green)	Meaning
ON	Power supply ok - Normal operation
blinking	in operation - status message pending*
at the press of the button	Trigger rotation angle adaptation, then normal operation

*** Status message pending:** signals a pending status message, whereby the type of fault is not specified. For a concrete evaluation of this collective fault message, a query must be made using service tools or the bus interface:

- Belimo Assistant app, TROX FlowCheck app or Belimo PC-Tool software
- MP-Bus command, Modbus register, BACnet object

Meaning of the yellow status LED/push button (applies to all VRU control components)

LED/push button (yellow)	Meaning
blinking	MP-Addressing
at the press of the button	Confirmation of addressing

Commissioning

- As the volume flow rates are factory set, the terminal units have to be installed at the specified locations
- After installation and wiring, the controller is ready for operation via the analogue interface
- Comply with the volume flow rate control ranges of the VAV terminal units; do not set a volume flow rate lower than the minimum flow rate
- Only briefly remove the protective cap of the control component during wiring

For bus operation, further commissioning steps are required depending on the required integration of the control component into the local network:

For operation with Modbus interface

- Switching the setpoint to bus with the service tool
- Bus protocol is already set in the factory from Modbus RTU; no adjustment required
- Adjust Modbus participant address and communication settings

For operation with BACnet interface

- Switching the setpoint to bus with the service tool
- Switch bus protocol to BACnet MS/TP with service tool
- Adjust BACnet subscriber address and communication settings

For operation with MP-Bus interface

- Switching the setpoint to bus with the service tool
- Switch bus protocol to MP-Bus with service tool
- Adjusting the MP-Bus subscriber address and communication settings
- For operation with MP-Bus interface in existing systems as a replacement for VRP-M controllers: Activation of VRP-M compatibility mode required

Functional scope of service tools

Function/parameter setting	TROX FlowCheck app	PC-Tool [1]	ZTH-EU
Setting of q_{vmin}, q_{vmax}	R, W [2]	R, W	R, W
Signal voltage range setting 0 – 10 V or 2 – 10 V DC for analogue interface	R, W [2]	R, W	–
Setpoint value default setting via analogue connection or bus (Modbus, BACnet or MP bus)	R, W [2]	R, W	–
Modbus, BACnet settings (address, communication parameters)	R, W [2]	R, W	–
MP-Bus settings (address)	R, W [2]	R, W	–
Execute override controls (test function)	yes [3]	yes	–
Trend display	yes [3]	yes	–

R, W = function is readable and writable
- = Function is not available for the service tool

[1] Requires interface converter, e.g. setting devices ZTH-EU
[2] Function/parameterisation is possible without connecting the controller to supply voltage
[3] Function/parameterisation only in conjunction with ZIP-BT-NFC **and** connected power supply to the controller

For the proper use of the service tools, they should always be kept up to date with the latest software version.
Information on current versions/updates for PC-Tool software and setting device ZTH-EU on the Belimo homepage www.belimo.com.
Minimum versions for ZTH-EU firmware: V 2.09.0004

Modbus RTU communication interface

Number	Register Address	Description	Range Enumeration	Unit	Scaling	Access
1	0	Setpoint value between $q_{vmin}/\Delta p_{min}$ (reg. address 105) and $q_{vmax}/\Delta p_{max}$ (reg. address 106) (*1) (*2) (*3) (*4)	0 – 10,000 Factory setting: 0	%	0.01	[R / W]
2	1	Override control Overwrites the setpoint value with override control	0: None 1: OPEN 2: CLOSED 3: $q_{vmin}/\Delta p_{min}$ 5: $q_{vmax}/\Delta p_{max}$ Factory setting: None	–	–	[R / W]
3	2	Command triggering Triggering of functions for service and test purposes. Command ends automatically with 0	0: None 1: Adapting 3: Synchronisation Factory setting: None	–	–	[R / W]
4	3	Type of actuator (*5)	0: Actuator not connected/not known 1: Actuator Air/Water with/without safety function 2: Volume flow controller VAV/EPIV 3: Fire damper 4: Energy Valve 5: 6way EPIV	–	–	[R]
5	4	Current damper blade position acc. to mechanical limits (*5)	0 – 10,000	%	0.01	[R]
6	5	Blade angle acc. to angle range (*5)	0 – 9,600	°	0.01	[R]
7	6	Relative volume flow rate related to q_{vnom} (reg. address 110) (*6)	0 – 15,000	%	0.01	[R]
8	7	Absolute volume flow rate (*6)	0 – q_{vnom}	cfm	1	[R]
9	8	Sensor value (voltage, resistance, switch) Value dependent on the setting of the sensor type (reg. address 107)	0 – 65,535	mV, Ω, 0/1	0.1	[R]
10	9	–	–	–	-	[–]
11	10	Absolute volume flow rate in selected volume flow unit acc. to (reg. address 117) (Low word) < 16 of 32 bit (*6)	0 – 500,000,000	UnitSel	0.001	[R]
12	11	Absolute volume flow rate in selected volume flow unit acc. to (reg. address 117) (High word) > 16 of 32 bit (*6)	0 – 500,000,000	UnitSel	0.001	[R]
13	12	Analogue setpoint value	0 – 10,000	%	0.01	[R]

Number	Register Address	Description	Range Enumeration	Unit	Scaling	Access
		Shows the setpoint value in % with analogue control input signal. Active if reg. address 118 = 0 (analogue)				
51		Relative differential pressure According to application case as per (reg. address 128)	0 – 20,000	%	0.01	[R]
52		Absolute differential pressure	-4.01 – 60.21	[in. w.g.]	0.1	[R]
53		–	–	–	–	[–]
54		Absolute differential pressure in selected unit (reg. address 145) (Low word) < 16 of 32 bit	-10,000,000 – 100,000,000	UnitSel	0.001	[R]
55		Absolute differential pressure in selected unit as per (reg. address 145) (High word) > 16 of 32 bit	-10,000,000 – 100,000,000	UnitSel	0.001	[R]
100	99	Bus terminal resistor Indicates whether the terminal resistor (120 Ω) is active or deactivated. Can only be set using service tools.	0: Not active 1: Active Factory setting: Not active	–	–	[R]
101	100	Serial number, part 1 Example: 00839-31324-064-008 1st part: 00839 2st part: 31324 3st part: 008	–	–	–	[R]
102	101	Serial number, part 2	–	–	–	[R]
103	102	Serial number, part 3	–	–	–	[R]
104	103	Firmware version Example: 101, version 01.01.	–	–	–	[R]
105	104	Malfunctions and service information – automatic reset if status has ceased	Bit 0: – Bit 1: Mechanical travel too high Bit2: Actuator cannot be moved (e.g. mechanical overload) Bit 3: – Bit 4: Error of dP sensor Bit 5: Return air flow detected Bit 6: Volume flow rate too low Bit 7: Flow rate in closed position Bit 8: Internal activity (e.g. test run, adaptation) Bit9: Gear release active Bit10: Bus monitoring triggered Bit 11: Actuator not suitable for application Bit 12: Pressure sensor incorrectly connected Bit 13: Pressure sensor not reached Bit 14: Error in dP sensor outside of measuring range	–	–	[R]
106	105	Setting work areas $q_{vmin}/\Delta p_{min}$ Requirements: $q_{vmin}/\Delta p_{min} < q_{vmax}/\Delta p_{max}$ Vmax in the area 0 – 100 % of $q_{vnom}/\Delta p_{nominal}$	0 – $q_{vmax}/\Delta p_{max}$	%	0.01	[R / W*]
107	106	Setting work areas $q_{vmax}/\Delta p_{max}$ Requirements: $q_{vmax}/\Delta p_{max} < q_{vmin}/\Delta p_{min}$	2,000–10,000	%	0.01	[R / W*]

Number	Register Address	Description	Range Enumeration	Unit	Scaling	Access
		Vmax in the area 20 – 100 % of q_{vnom}/ $\Delta p_{nominal}$				
108	107	Type of sensor If reg. address 118 = 0 (analogue), then reg. address 107 = 1 (active) for mV	0: None 1: Active 2: Passive 3: – 4: Switch Factory setting: None	–	–	[R / W*]
109	108	Bus timeout monitoring If there is a bus timeout, the actuator moves into a position specified here. The position is mech. limited, q_{vmin}/ Δp_{min} and q_{vmax}/Δp_{max} have no impact. Release if no change takes place in reg. address 1 or reg. address 2 in the specified time for reg. address 109. Display of release in reg. address 104. In hybrid mode, bus timeout activation is deactivated. Bus timeout time: acc. to reg. address 109	0 – 10,000 Factory setting: 0	%	0.01	[R / W*]
110	109	Time until release bus timeout monitoring If reg. 108 ≠ 0, then the initial automatic status is reg. 108 = 120 s.	0 – 3,600 0: Inactive Factory setting: Deactivated	s	1	[R / W*]
113	112	Nominal volume flow rate in selected volume flow unit acc. (reg. address 117) (Low word) < 16 of 32 bit	0 – 60,000,000	UnitSel	0.001	[R]
114	113	Nominal volume flow rate in selected volume flow unit acc. (reg. address 117) (High word) > 16 of 32 bit	0 – 60,000,000	UnitSel	0.001	[R]
115	114	–	–	–	–	[–]
116	115	–	–	–	–	[–]
117	116	Control mode	0: Position control (open loop) 1: Volume flow control Factory setting: Volume flow control	–	–	[R]
118	117	Unit selection – Unit selection for reg. address 11 and 12	0: – 1: m³/h 2: l/s 3: – 4: – 5: – 6: cfm	-	–	[R / W*]
119	118	Setpoint value setting If reg. address 118 = 0 (analogue), then reg. address 12 = active. If reg. address 118 = 1 (Bus), then reg. address 1 = active.	0: Analogue (0 – 10 V, 2 – 10 V) 1: Bus (Modbus, BACnet, MP-Bus) Factory setting: Analogue	–	–	[R / W*]

Number	Register Address	Description	Range Enumeration	Unit	Scaling	Access
120		Pressure operating mode Only for VRU-M1R-M/B TR.	0: Negative pressure 1: Positive pressure	–	–	[R / W*]
121		–	–	–	–	[–]
122		–	–	–	–	[–]
123		–	–	–	–	[–]
124		Room pressure cascade release Only available if reg. address 124 = 0 (volume flow control) or 2 (room pressure control).	0: Inactive 1: Active 2: Active fast (only for VRU-M1R-M/B TR)	–	–	[R]
125		Applications	0: Volume flow control 1: Pressure control 2: Room pressure control 3: Flow measurement	–	–	[R]
126		Unit height	0 – 9,842.52 Factory setting: 0	ft	1	[R / W*]
127		Nominal differential pressure in the selected unit as per (reg. address 145) More info in (reg. address 128)	D3: 0 – 50000 M1: 0 – 60000 M1R: 0 – 60000	UnitSel	–	[R]
128		–	–	–	–	[–]
129		Nominal differential pressure in in. w.g. If reg. address 124 = 0 (volume flow control), then reg. address 110 as q_{vnom}. If reg. address 124 = 1 (differential pressure control) or 2 (room pressure control), then the maximum is defined by the diff. pressure.	D3: 0 – 2 M1: 0 – 2 M1R: 0 – 3.01	in. w.g.	0.1	[R]
146		Selection of the pressure unit The selected unit is displayed in (reg. address 126).	0: in. w.g. 1: – 2: Water column Factory setting: in. w.g.	–	–	[R / W*]

[R] = Read-only access to register
[R/W] = Register readable and writable
[R/W*] = Register readable and writeable with restrictions; all writeable registers from 100 are persistent (stored in the EEPROM), regular or cyclical writing must be avoided.

(*1) If reg. addr. 118 = 1 (bus), then reg. addr. 0 = active
(*2) If reg. addr. 124 = 0 (flow rate control), then reg. addr. 0 = flow rate
(*3) If reg. addr. 124 = 0 (volume flow control) and reg. addr. 116 = 0 (position control), then reg. addr. = damper blade position
(*4) If reg. addr. 124 = 1 (differential pressure control) or 2 (room pressure control), then reg. addr. = pressure
(*5) If reg. addr. 124 = 2 (room pressure control) or 3 (volume flow measurement), then reg. addr. = deactivate 65.535
(*6) If reg. addr. 124 = 1 (differential pressure control) or 2 (room pressure control), then reg. addr. = deactivate 65.535

BACnet MS/TP - Protocol Implementation Conformance Statement - PICS (General information)

Date	2020-06-11
Vendor Name	TROX GmbH
Vendor ID	329
Product Name	VRU-D3-BAC, VRU-M1-BAC, VRU-M1R-BAC
Product Model Number	VRU - BAC
Applications Software Version	01.02.0001
Firmware revision	10.02.0000
BACnet Protocol Revision	12
Product Description	Controller for VAV/CAV and pressure applications
BACnet Standard Device Profile	BACnet Application Specific Controller (B-ASC)
BACnet Interoperability Building Blocks supported	Data Sharing – ReadProperty-B (DS-RP-B) Data Sharing – ReadPropertyMultiple-B (DS-RPM-B) Data Sharing – WriteProperty-B (DS-WP-B) Data Sharing – WritePropertyMultiple-B (DS-WPM-B) Data Sharing – COV-B (DS-COV-B) Device Management – DynamicDeviceBinding-B (DM-DDB-B) Device Management – DynamicObjectBinding-B (DM-DOB-B) Device Management – DeviceCommunicationControl-B (DM-DCC-B)
Segmentation Capability	No
Data Link Layer Options	MS/TP master, baud rates: 9600, 19200, 38400, 76800, 115200
Device Address Binding	No static device binding supported
Networking Options	None
Character Sets Supported	ISO 10646 (UTF-8)
Gateway Options	None
Network Security Options	Non-secure device

Communication interface BACnet MS/TP - Object processing

Object type	Optional properties	Writeable properties
Analog Input [AI]	Description COV Increment	COV Increment
Analog Output [AO]	Description COV Increment	Present Value COV Increment Relinquish Default
Analog Value [AV]	Description COV Increment	Present Value COV Increment
Binary Input [BI]	Description Active Text Inactive Text	
Device	Description Location Active COV Subscriptions Max Master Max Info Frames Profile Name	Object identifier Object Name Location Description APDU Timeout (1000 – 60000) Number Of APDU Retries (0 – 10) Max Master (1 – 127) Max Info Frames (1 – 255)
Multi-state Input [MI]	Description State Text	
Multi-state Output [MO]	Description State Text	Present Value Relinquish Default
Multi-state Value [MV]	Description State Text	Present Value (if marked)

Editing of services

- The unit does not support the services "Create object" and "Delete object".
- The specified maximum length of writable strings is based on single-byte characters.

1. Object name 32 characters
2. Location 64 characters
3. Description 64 characters

- The unit supports DeviceCommunicationControl services, no password required.
- A maximum of 6 active COV subscriptions with a runtime of 1 - 28800 s (maximum 8 h) are supported.

Communication interface BACnet MS/TP - BACnet objects

Object Name	Object Type	Description	Values	COV Increment	Access
Device	Device [Inst.No]		0 – 4,194,302 Factory setting: 1	–	WR
RelPos	AI[1]	Damper blade position in % Status flags: (*1), (*2)	0 – 100	0.01 – 100 Factory setting: 1	RD
AbsPos	AI[2]	Absolute position in ° Angular position corresponding to the entire rotation range. Status flags: (*1), (*2)	0 – max. angle	0.01 – 90 Factory setting: 1	RD
SpAnalogue	AI[6]	Analogue setpoint value in % Shows the analogue setpoint value according to the selected application flow rate, pressure, damper blade position as per ApplicationSel MV[2]. If setpoint value setting in SpSource MV[122] = 1 (analogue), then SpAnalog AI[6] = active. The analogue setpoint value is limited by Min AV[97] and Max AV[98]. Status flags: (*1), (*3)	0 – 100	0.01 – 100 Factory setting: 1	RD
RelDeltaP	AI[9]	Relative differential pressure in % with respect to DeltaPnom_in.w.g. AV[122]	0 – 150	0.01 – 150 Factory setting: 1	RD
RelFlow	AI[10]	Relative volume flow rate in % related to Vnom_cfm AV[112] Status flags: (*4)	0 – 150	0.01 – 150 Factory setting: 1	RD
AbsFlow_cfm	AI[12]	Absolute volume flow rate in cfm Status flags: (*4)	0 – 35,314.62	1 – 35,314.62 Factory setting: 10	RD
DeltaP_UnitSel	AI[18]	Absolute differential pressure in selected unit as per UnitSelPressure MV[127]	-10,000 – 100,000	0.001 – 100,000 Factory setting: 1	RD
AbsFlow_UnitSel	AI[19]	Absolute volume flow rate in selected unit as per UnitSelAirFlow MV[121] Status flags: (*4)	0 – 500,000	0.01 – 500,000 Factory setting: 1	RD
Sens1Analogue	AI[20]	Sensor 1 as analogue value If Sensor1Type MV[220] = 2 (active), then display = analogue value in 0 – 10 V. If Sensor1Type MV[220] = 3 (passive), then display = resistance value. If RmPCascade MV[10] = 2 (enabled) or 3 (quickly enabled), then the sensor input is not	0 – 65535	0.01 – 1000 Factory setting: 1	RD

Object Name	Object Type	Description	Values	COV Increment	Access
		available. Status flags: (*5)			
DeltaP_in.w.g .	AI[29]	Absolute differential pressure in in. w.g.	0 – 2.41	0.01 – 2.41 Factory setting: 10	RD
SpRel	AO[1]	Relative setpoint value in % The rel. setpoint value depends on the application (flow rate/pressure/ damper blade position). If SpSource MV[122] = 2 (bus), then SpRel AO[1] = active. The analogue setpoint value is limited by Min AV[97] and Max AV[98]. Status flags: (*1), (*2)	0 – 100 Factory setting: 0	0.01 – 100 Factory setting: 1	C
Min	AV[97]	Minimum setpoint value in % (q_{vmin}/ P_{min}) Requirement: $q_{vmin}/\Delta p_{min} < q_{vmax}/\Delta p_{max}$ $q_{vmin}/\Delta p_{min}$ in the range 0 - 100 & q_{vnom}/ Δp_{nom}	0 – $q_{vmax}/\Delta p_{max}$	0.01 – 100 Factory setting: 1	WR
Max	AV[98]	Maximum setpoint value in % (q_{vmax}/ P_{max}) Requirement: $q_{vmax}/\Delta p_{max} > q_{vmin}/\Delta p_{min}$ q_{vmax}/P_{max} in the range 20 - 100 % of q_{vnom}/P_{nom}	$q_{vmin}/\Delta p$ – 100	0.01 – 100 Factory setting: 1	WR
Vnom_cfm	AV[112]	Nominal volume flow rate in cfm	0 – 29,428.85	0.01 – 29,428.85 Factory setting: 1	RD
Vnom_UnitSel	AV[119]	Nominal volume flow rate in selected unit as per UnitSel MV[121]	0 – 250,000	0.01 – 1,000: Factory setting: 1	RD
SystemAltitude	AV[120]	System altitude in feet above sea level	0 – 9,842.52	1 – 9,842.52 Factory setting: 10	WR
DeltaPnom_in. w.g.	AV[122]	Nominal differential pressure in in. w.g. The nominal differential pressure depends on the selected pressure sensor (D3, M1, M1R). Depending on the selected application, the nominal differential pressure serves as dp@Vnom or as the maximum pressure limitation If ApplicationSel MV[2] = 1 (flow control), then display = nominal differential pressure If ApplicationSel MV[2] = 2 (pressure control) or 3 (room pressure control), then display = max. pressure limitation	D3: 0 – 2 M1: 0 – 2 M1R: 0 – 0.3	1 – 2 Factory setting: 1	RD

Object Name	Object Type	Description	Values	COV Increment	Access
DeltaPnom_UnitSel	AV[129]	Nominal differential pressure in selected unit as per UnitSelPressure MV[127] More infos: see AV[122].		0.01 – 1000 Factory setting: 1	RD
BusWatchdog	AV[130]	Time until the release bus timeout monitoring in s If BusWatchdog AV[130] ≠ 0, then monitoring of SpRel AO[1] and override MO[1] for change. If changes in SpRel AO[1] and override MO[1], then reset the bus timeout monitoring. If SpSource MV[122] = 1 (analogue), then BusWatchdog AV[130] only takes account of override MO[1].	0 – 3600 s Factory setting: 0 (bus timeout monitoring deactivated)	0.01 – 1000 Factory setting: 1	WR
Sens1Switch	BI[20]	Switch status of the switch at the sensor input If SenType MV[220] = 5 (switch), then Sens1Switch BI[20] = active. Status flags: (*6)	0: Inactive 1: Active	–	RD
BusTermination	BI[99]	Terminal resistor Shows whether the terminal resistor (120 Ω) has been activated via the service tools.	0: Deactivated 1: Activated	–	RD
SummaryStatus	BI[101]	Condensed status Groups together the status of the objects: "StatusSensor" MI[103] "StatusFlow" MI[104] "StatusActuator" MI[106] "StatusPressure" MI[109] "StatusDevice" MI[110]	Not equal to 1: OK 1: Not OK	–	RD
RmPCasacade	MV [10]	Room pressure cascade If RmPCascade MV[10] = 2 (active) or 3 (active fast), then sensor1 is the input for the room cascade (0 – 10 V). If ApplicationSel MV[2] =1 (volume flow control) or 3 (room pressure control), then RmPCascade MV [10] = active. Status flags: (*7)	1: Inactive 2: Active 3: Active fast (for M1R only)	–	RD
InternalActivity	MI[100]	Internal status	1: None 2: – 3: Adaption 4: Synchronisation	–	RD

Object Name	Object Type	Description	Values	COV Increment	Access
StatusSensor	MI[103]	Status of the differential pressure sensor If status end = automatic reset	1: OK 2: dP sensor not OK 3: dP sensor outside of measuring range 4: dP sensor incorrectly connected	–	RD
StatusFlow	MI[104]	Volume flow rate status If there is no volume flow rate within 600 s, then StatusFlow MI[104] = 3.	1: OK 2: – 3: No airflow detected	–	RD
StatusActuator	MI[106]	Status of the actuator Status flags: (*2)	1: OK 2: Actuator cannot be moved 3: Gear release active 4: Mechanical travel exceeded 5: Actuator not suitable for application	–	RD
StatusPressure	MI[109]	Differential pressure status If the differential pressure is not reached within 180 s, then StatusPressure MI[109] = 3.	1: OK 2: – 3: Pressure not reached	–	RD
StatusDevice	MI[110]	Status of the device during bus monitoring According to BusWatchdog AV[130].	1: OK 2: Bus timeout monitoring activated	–	RD
Override	MO[1]	Override control Overwrites the setpoint value with a forced command. Status flags: (*8)	1: None 2: OPEN 3: CLOSED 4: q_{vmin}/Δpmin 5: – 6: q_{vmax}/Δpmax Factory setting: None (1)	–	C
ApplicationSel	MV[2]	Display of application VRU-D3-M/B TR, VRU-M1-M/B TR - Flow control - Pressure control - Flow measurement VRU-M1R-M/B TR - Room pressure control	1: Flow control 2: Pressure control 3: Room pressure control 4: Flow measurement	–	RD
ControlMode	MV[100]	Control mode Status flags: (*9)	1: PosCtrl 2: FlowCtrl Factory setting: FlowCtrl	–	RD
OperationMode	MV[102]	Operating mode Only relevant for VRU-M1R-BAC. Status flags: (*10)	1: Negative pressure 2: Positive pressure	–	WR
Command	MV[120]	Release test functions Status flags: (*2)	1: None 2: Adaption 3: – 4: Reset Factory setting: None	–	WR
UnitSelAirFlow	MV[121]	Selection of the volume flow unit	1: – 2: m³/h 3: l/s	–	WR

Object Name	Object Type	Description	Values	COV Increment	Access
		The selected unit is indicated in AI[19] and AV[104]	4: – 5: – 6: – 7: cfm		
SpSource	MV[122]	Selection of the setpoint value setting If SpSource MV[122] = 1 (analogue), then SpAnalog AI[6] = active. If SpSource MV[122] = 2 (bus), then SpRel AO [1] = active.	1: Analogue (0 – 10 V, 2 – 10 V) 2: Bus (Modbus, BACnet, MP-Bus) Factory setting: Analogue	–	WR
UnitSelPressure	MV[127]	Selection of the pressure unit The selected unit is indicated in DeltaP_UnitSel AI[18] and DeltaPnom_UnitSel AV[129].	1: Pascal 3: Water column Factory setting: pascal	–	WR
UnitSelTemp	MV[128]	Selection of temperature unit The selected unit is located in AI[20].	1: K 2: °C 3: °F Factory setting: °C (2)	–	W
Sens1Type	MV[220]	Definition of the sensor type If Sens1Type MV[220] = 2 (active) or 3 (passive), then Sens1Analog AI[20] active. If Sens1Type MV [220] = 5 (switch), then Sens1Schalter BI[20] active.	1: None 2: Active sensor (in hybrid mode) 3: Passive sensor 4: – 5: Switch Factory setting: None	–	WR

RD = Read-only access
WR = Read/write access
C = Commendable with priority array
Status flags:
(*1) If gear disengagement pressed, then Overridden = 1
(*2) If ApplicationSel MV[2] = 3 (room pressure control) or 4 (flow measurement), then Out of Service = 1
(*3) If SpSource MV[122] = 2 (bus), then Out of Service = 1
(*4) If ApplicationSel MV[2] = 2 (pressure control) or 3 (room pressure control), then Out of Service = 1
(*5) If Sens1Type MV[220] = 1 (none), then Out of Service = 1
(*6) If Sens1Type MV[220] ≠ 5, then Out of Service = 1
(*7) If ApplicationSel MV[2] = 2 (pressure control) or 4 (flow measurement), then Out of Service = 1
(*8) If ApplicationSel MV[2] = 4 (flow measurement), then Out of Service = 1
(*9) If ApplicationSel MV[2] ≠ 1 (flow rate control), then Out of Service = 1
(*10) If ApplicationSel MV[2] ≠ 3 (room pressure control), then Out of Service = 1

Product details

Analogue interface 0 – 10 V DC or 2 – 10 V DC

In the delivery state, the setpoint must be specified via the analogue interface. If the setpoint value is specified via a digital communication interface, this can be changed to Modbus, BACnet or MP-Bus at any time via the TROX FlowCheck App. The analogue interface can be set for the signal voltage range 0 - 10 V DC or 2 - 10 V DC through the TROX FlowCheck App. The assignment of the volume flow setpoint or actual value to the voltage signal is shown in the characteristic diagrams.

Setpoint value setting

Variable operation

- In the variable operating mode, the setpoint is specified with an analogue signal at terminal 3. Setpoint specifications via the respective bus system are rejected
- The selected signal voltage range 0 – 10 V or 2 – 10 V DC is assigned to the volume flow rate range q_{vmin} – q_{vmax} assigned to
- Volume flow rate range q_{vmin} – q_{vmax} set at the factory according to the order code details
- Subsequent adjustment of q_{vmin} or q_{vmax} possible via adjustment device, TROX FlowCheck app or PC tool

Constant value mode

- In the operating mode fixed value operation, no analogue signal is required at terminal 3
- The value given by q_{vmin} is controlled through the fixed volume flow rate value
- Volume flow q_{vmin} set at the factory according to the order code details
- Subsequent adjustment of q_{vmin} possible via adjustment device, TROX FlowCheck app or PC tool

Actual value as feedback for monitoring or tracking control

- The actual volume flow rate measured by the controller can be captured as a voltage signal at terminal 5
- Selected signal voltage range 0 - 10 V DC or 2 - 10 V DC is applied to the volume flow range 0 - q_{vnom} shown
- In analogue mode, there is the parallel option of querying operating data via the Modbus interface (hybrid mode)

Override control

For special operating situations, the volume flow controller can be set to a special operating state (override control). The following modes are possible: control q_{vmin}, control q_{vmax}, damper blade open (OPEN), damper blade closed (CLOSED) or control stop.

Override controls via signal input Y or override control inputs z1, z2

Through suitable wiring of the inputs Y, z1, z2, the override controls can be activated according to the wiring diagrams via wiring with external switching contacts/relays (see wiring examples).

Override control CLOSED via command signal at signal input Y

With signal voltage range 0 - 10 V DC and setting value q_{vmin} = 0

- Flap CLOSED: Y < 0.45 V DC
- Modulating duty: Y > 0.55 V DC

With signal voltage range 0 - 10 V DC and q_{vmin} > 0

- If override control CLOSED is not possible via the command signal. The control process takes place over the entire signal voltage range

With signal voltage range 2 - 10 V DC and setting value q_{vmin} = 0

- Flap CLOSED: Y < 2.36 V DC
- Modulating duty: Y > 2.44 V DC

With signal voltage range 2 - 10 V DC and setting value q_{vmin} > 0

- Flap CLOSED: Y < 0.3 V DC
- Regulation q_{vmin}: Y > 0.3 V DC
- Modulating duty: Y > 2.44 V DC

Digital communication interface

For a setpoint value specification via the bus interface, an on-site conversion with the TROX FlowCheck App is necessary. The bus interface can be set to Modbus, BACnet and MP-Bus. For smooth data exchange in the on-site bus network, it is necessary to set the communication parameters and the participant address for the bus interface. The communication parameters of the bus systems (address, baud rate, etc.) can be set using the TROX FlowCheck app. The interface provides standardised bus register/object access to the available data points.

Setpoint value setting

- In Modbus RTU operating mode (factory setting), the setpoint is specified by entering the volume flow setpoint [%] in Modbus register 0

- In the BACnet MS/TP operating mode, the setpoint is specified by specifying the volume flow setpoint [%] in the BACnet object AI[1]
- The percentage value refers to the volume flow rate range specified by q_{vmin} – q_{vmax} defined volume flow range
- Volume flow rate range q_{vmin} – q_{vmax} set at the factory according to the order code details
- Subsequent adjustment of q_{vmin} or q_{vmax} possible via setting device, TROX FlowCheck App, PC tool or via Modbus/BACnet interface

Actual value as feedback for monitoring or tracking control

- Both Modbus and BACnet show actual values in m³/h (factory setting). Other units such as l/s and cfm can also be selected.
- In addition to the volume flow rate actual value, other information can be read out using other Modbus registers/BACnet objects
- Overview of the registers/objects in the communication tables
- In bus mode the actual volume flow rate can be captured at terminal 5
- The volume flow rate range 0 – q_{vnom} always corresponds to the signal voltage range (0)2 – 10 V DC

Override control

For special operating situations, the volume flow controller can be set to a special operating state (override control). The following modes are possible: control q_{vmin}, control $q_{vmax}$the control damper is in the open position (OPEN), control damper closed (CLOSED) or control stop.

Priority control via the bus

Specifications are made via Modbus register 1 or via BACnet object type MO[1].

Override control by bus failure monitoring (Modbus)

In case of failure of the Modbus communication for a defined period of time, a predefined operating state q_{vmin}, q_{vmax}, OPEN or CLOSED can be activated.

- The override to be activated in case of bus failure is defined via Modbus register 108 or 109
- The determination after which bus failure time the override control is activated is made via Modbus register 109 or 110
- Any Modbus communication resets the bus failure monitoring timeout

Override control by bus failure monitoring (BACnet)

If BACnet communication fails for a specified period of time, a predefined operating state can be activated.

- The setpoint to be activated in the event of bus failure is determined via the Reliquish_Default of SpRel (Object AO1)
- Bus failure time is defined via BusWatchdog (object type AV [130])
- Communication on the data points SpRel (Object AO[1] and Override (Object MO[1]) resets the timeout of bus failure monitoring

Override controls for diagnosis

Activation via bus systems, external/on-site switching contacts (bridges), and TROX FlowCheck App.

Prioritisation of different default options

Specifications for override controls via switching contacts are prioritised over Modbus/BACnet specifications.

- Highest priority: Preset via override control by external wiring (switching contact, relay)
- Medium priority: Specifications via the service plug (TROX FlowCheck App) for test purposes
- Lowest priority: Default via Modbus/BACnet/MP bus

Characteristic of the setpoint value signal

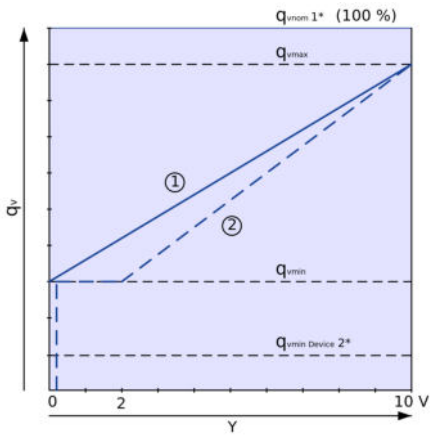

① Signal voltage range 0 – 10 V
② Signal voltage range 2 – 10 V
1* = q_{vnom} Nominal volume flow rate
2* = $q_{vmin\ unit}$ Acceptable minimum volume flow rate

Characteristic of the actual value signal

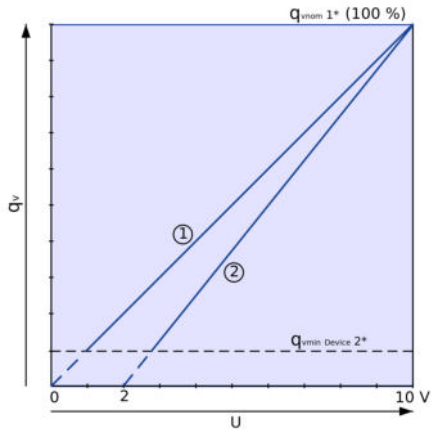

① Signal voltage range 0 – 10 V
② Signal voltage range 2 – 10 V
1* = q_{vnom} Nominal volume flow rate
2* = $q_{vmin\ unit}$ Acceptable minimum volume flow rate

Calculation of volume flow rate setpoint value at 0 – 10 V

$$q_{vset} = \frac{Y}{10\ V} \times (q_{vmax} - q_{vmin}) + q_{vmin}$$

Calculation of volume flow rate actual value at 0 – 10 V

$$q_{vact} = \frac{U}{10\ V} \times q_{vnom}$$

Calculation of volume flow rate setpoint value at 2 – 10 V

$$q_{set} = \frac{Y - 2\ V}{(10\ V - 2\ V)} \times (q_{vmax} - q_{vmin}) + q_{vmin}$$

Calculation of volume flow rate actual value at 2 – 10 V

$$q_{vact} = \frac{U - 2}{10\ V - 2\ V} \times q_{vnom}$$

View of plug-in terminal strips at the VRU

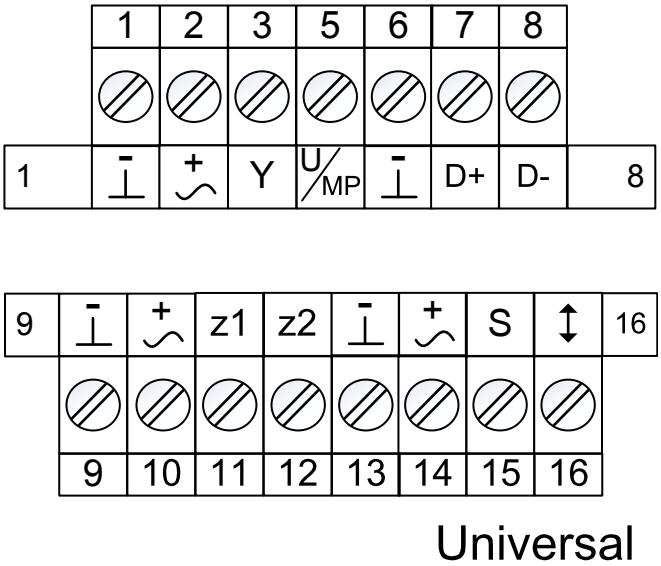

Nomenclature

1, 6, 9, 13: ⊥, – = Ground, neutral
2, 10, 14: ~, + = Supply voltage 24 V
3: Y = Setpoint signal Y and override controls
5: U/MP = Actual value signal or MP-Bus or service tool connection
7: D+ = B = C2 = RS-485 bus (BACnet MS/TP or Modbus RTU)
8: D- = A = C1 = RS-485 bus (BACnet MS/TP or Modbus RTU)
11, 12: z1, z2 = Forced control inputs
15: Extension for external sensor
16: Not used

Wiring diagram analogue control

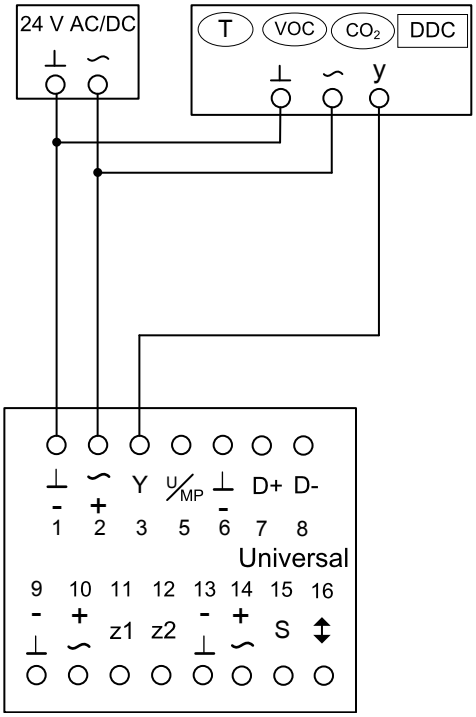

Nomenclature

1: ⊥, – = Ground, neutral
2: ~, + = Supply voltage 24 V AC/DC
3: Y = Setpoint signal and override controls
5: U/MP = Actual value signal

Notes

- T, VOC, CO2, DDC = Setpoint value default setting q_v
- Setpoint value and actual value signals depend on the signal voltage range, either 0 – 10 V DC or 2 – 10 V DC

Wiring diagram Modbus, BACnet operation

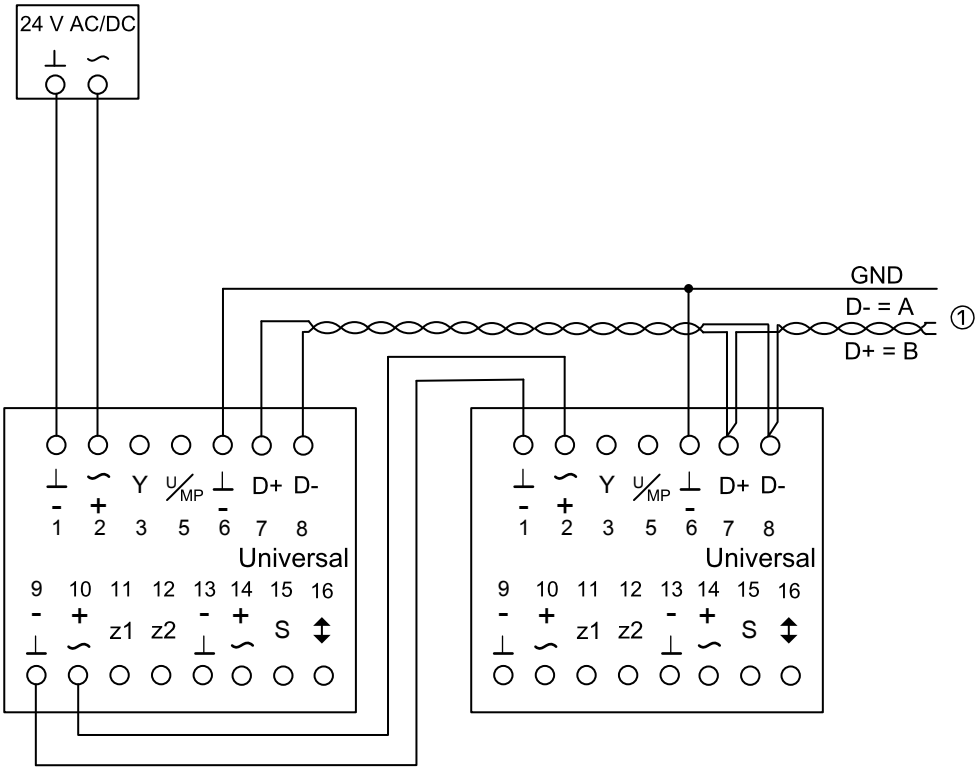

Nomenclature

1: ⊥, – = Ground, neutral
2: ~, + = Supply voltage 24 V AC/DC
6: GND = Common ground potential
7: D+ = Modbus/BACnet B, C2
8: D- = Modbus/BACnet A, C1

Note

- ① Additional network participants for Modbus/BACnet (maximum 32)
- Supply voltage and communication not galvanically isolated
- Voltage supply: Make sure that all devices on the bus have the same GND reference point
- Use terminal resistors on both ends of the bus. Bus terminating resistors integrated in the VRU can be activated with the service tool

MP-Bus connection diagram

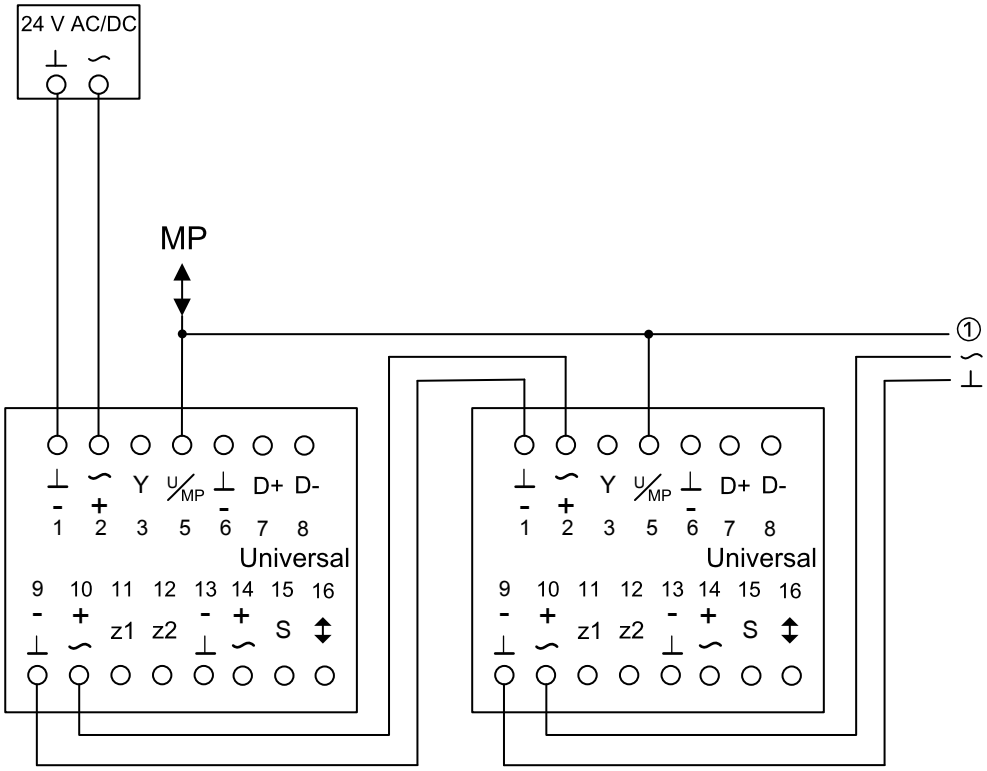

Nomenclature

1: ⊥, – = Ground, neutral
2: ~, + = Supply voltage 24 V AC/DC
5: U/MP = MP-Bus connection

Note

- ① Number of MP-Bus participants depends on the type of MP-Bus devices; maximum 16 participants
- Of which max. 8 MP participants (e.g. volume flow controller)
- Plus a maximum of 8 MPL participants (e.g. valve drives)
- Supply voltage and communication not galvanically isolated
- Voltage supply: Make sure that all devices on the bus have the same GND reference point.

Connection diagram hybrid operation

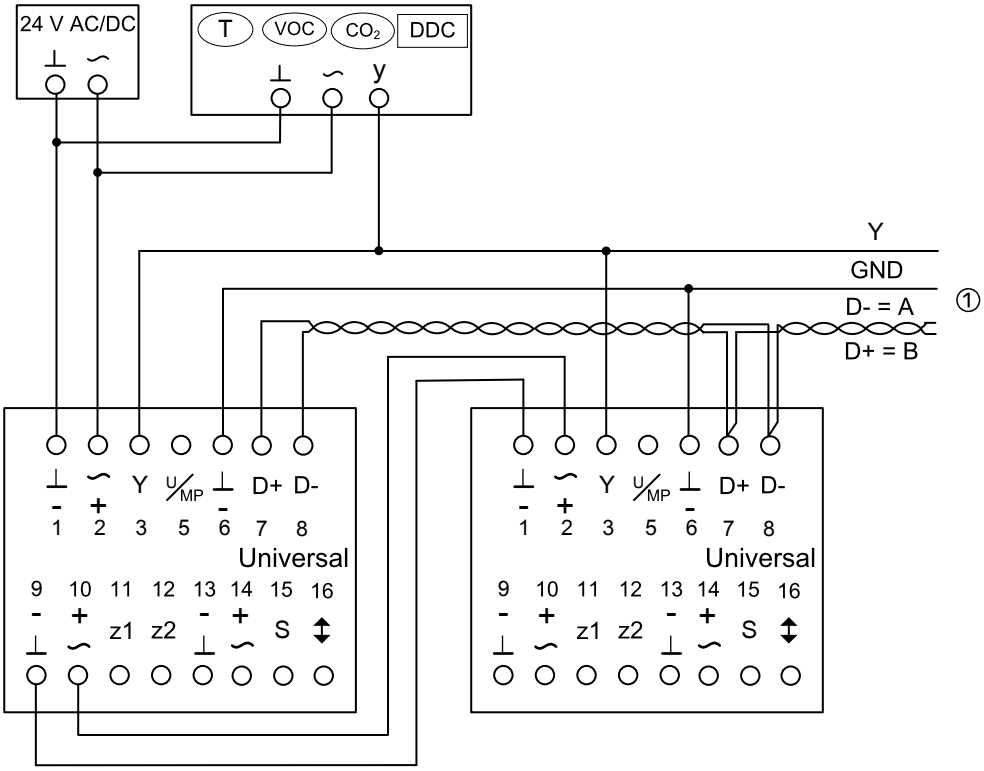

Nomenclature:

1: ⊥, – = Ground, neutral
2: ~, + = Supply voltage 24V AC/DC
6: GND = Common ground potential
7: D+ = Modbus/BACnet B, C2
8: D- = Modbus/BACnet A, C1

Notes

- T, VOC, CO 2 , DDC = Setpoint q_v
- ① Additional network participants for Modbus/BACnet (maximum 32)
- Supply voltage and communication not galvanically isolated
- Voltage supply: Make sure that all devices on the bus have the same GND reference point.
- Use bus terminating resistors at the ends of the bus line
- Bus terminating resistors integrated in the VRU can be activated with the service tool

Connection diagram for override controls, Alternative 1: Y-input

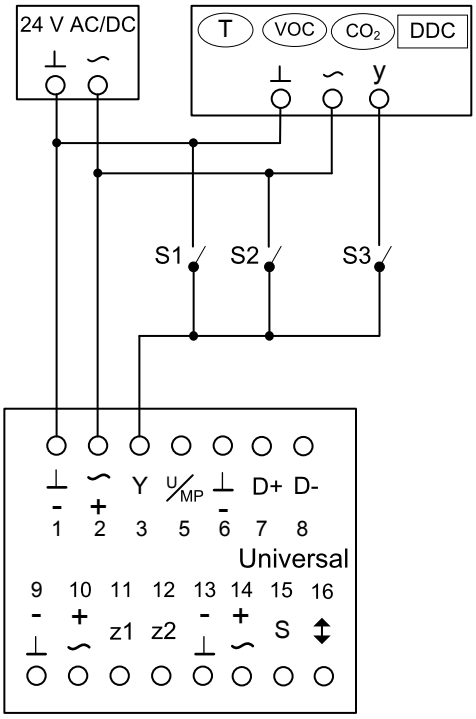

Nomenclature

1: ⊥, – = Ground, neutral
2: ~, + = Supply voltage 24 V AC/DC
3: Y = Setpoint signal and override controls
5: U/MP = Actual value signal or MP-Bus or service tool connection

Notes

- T, VOC, CO2, DDC = setpoint for q_v
- When combining several override controls, the switches must be interlocked to prevent short-circuits
- Setpoint value and actual value signals depend on the signal voltage range, either 0 – 10 V DC or 2 – 10 V DC
- Supply voltage and communication not galvanically isolated
- Voltage supply: Make sure that all devices on the bus have the same GND reference point
- Use terminal resistors on both ends of the bus. Bus terminating resistors integrated in the VRU can be activated with the service tool

Wiring variants Y-signal

Constant value mode q_{vmin} (override control q_{vmin})

- Only switch (connection) S1 may be closed
- Only works with signal voltage range 0 - 10 V DC

Override control q_{vmax}

- Only S2 has to be closed

Normal operation q_{vmin} – q_{vmax}

- Analogue setpoint setting e.g. by room temperature control
- Only S3 has to be closed

Override control, damper blade CLOSED

- Only S1 has to be closed
- Only works with signal voltage range 2 - 10 V DC

Connection diagram for override controls, Alternative 2: z1/z2 input

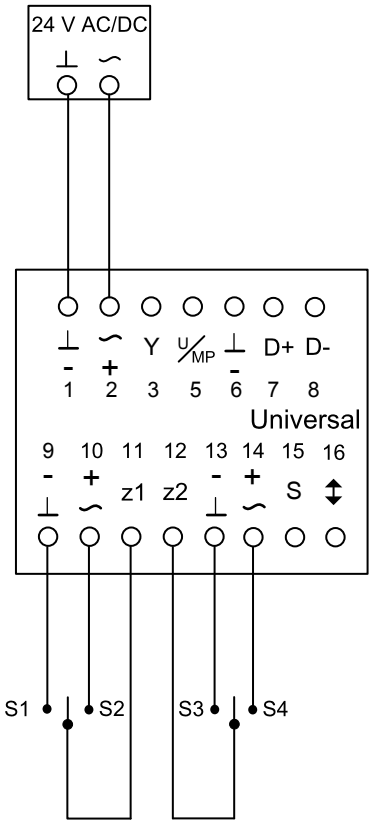

Nomenclature

9: ⊥, – = Ground, neutral
10: ~, + = Supply voltage 24 V AC/DC
11: Priority z1
12: Priority z2
13: ⊥, – = Ground, neutral
14: ~, + = Supply voltage 24 V AC/DC

Notes

- When combining several override controls, the switches must be interlocked to prevent short-circuits
- Setpoint value and actual value signals depend on the signal voltage range, either 0 – 10 V DC or 2 – 10 V DC
- Supply voltage and communication not galvanically isolated
- Voltage supply: Make sure that all devices on the bus have the same GND reference point.
- Use terminal resistors on both ends of the bus. Bus terminating resistors integrated in the VRU can be activated with the service tool

Wiring variants z1/z2 input

Override control, damper blade OPEN

- Only S2 has to be closed

Override control, damper blade CLOSED

- Only S3 has to be closed

Override control q_{vmax}

- Only S4 has to be closed

Control stop

- Only S1 has to be closed

Further override controls possible at the Y input.

Explanation

q_{vNom} [m3/h]; [l/s]; [CFM]
Nominal flow rate (100 %): The value depends on product type, nominal size and control component (attachment). Values are published on the internet and in technical leaflets and defined in the Easy Product Finder design programme. Reference value for calculating percentages (e.g. $q_{vmax.}$). Upper limit of the setting range and maximum volume flow rate setpoint value for the VAV terminal unit.

$q_{vmin\ Unit}$ [m3/h]; [l/s]; [CFM]
Technical minimum volume flow: The value depends on product type, nominal size and control component (attachment). Values are defined in the Easy Product Finder design programme Lower limit of the setting range and minimum volume flow rate setpoint value for the VAV terminal unit. Setpoint values below $q_{vmin\ unit,}$ (if q_{vmin} equals zero) may result in unstable control or shut-off.

q_{vmax} [m3/h]; [l/s]; [CFM]
Client-adjustable upper limit of the operating range for the VAV terminal unit: $q_{vmax.}$ can be set to less than or equal to q_{vNom} on the terminal unit. In case of analogue control of volume flow controllers (typically used), the maximum value of the setpoint signal (10 V) is assigned to the set maximum value ($q_{vmax.}$, see characteristics.

q_{vmin} [m3/h]; [l/s]; [CFM]
Client-adjustable lower limit of the operating range of the VAV terminal unit: q_{vmin} should be set to less than or equal to $q_{vmax.}$ q_{vmin} must not be set to less than $q_{vmin\ unit,}$ as the control may become unstable or the damper blade may close. q_{vmin} may equal zero. In case of analogue control of volume flow controllers (typically used), the minimum value of the setpoint signal (0 or 2 V) is assigned to the set minimum value (q_{vmin}, see characteristics.

q_v [m3/h]; [l/s]; [CFM]
Volume flow rate

Volume flow controller
Consists of a basic unit with an attached control component.

Basic unit
Unit for controlling volume flow rates without an attached control component. The main components include the casing with sensor(s) to measure the differential pressure and the damper blade to restrict the volume flow. The basic unit is also referred to as a VAV terminal unit. Important distinguishing features: Geometry or unit shape, material and connection variants, acoustic characteristics (e.g. optional acoustic cladding or integrated silencers), range of volume flow.

Control component
Electronic unit(s) mounted on the basic unit to control the volume flow rate, or the duct pressure, or the room pressure by adjusting the damper blade position. The electronic unit mainly consists of a controller with differential pressure transducer (integrated or external), and an integrated actuator (Easy and Compact controllers) or external actuator (Universal or LABCONTROL controller). Important distinguishing features: Transducer: dynamic transducer for clean air, or static transducer for polluted air. Actuator: Standard actuator (slow-running), spring return actuator for fail-safe position, or fast-running actuator. Interface technology: analogue interface or digital bus interface for connecting and recording signals and data.