PD
Stat.

Duct pressure control - static transducer

NC
NO

Safe position - spring return

Control component

BUPNF

Control component with static transducer and separate spring return actuator for VAV terminal units for duct pressure control

Universal device for use with VAV terminal units

- Controller and static differential pressure transducer are fitted together in one casing
- Separate actuator with spring return for safe position
- Use in ventilation and air conditioning systems, with clean and contaminated air
- Duct pressure control up to 1.81 in. w.g., e.g. line pressure control
- Constant value control Δp_{min} or variable control $\Delta p_{min} – \Delta p_{max}$
- Operating parameter Δp_{min} and Δp_{max} are set in the factory and saved in the controller
- Activation of override controls via external wiring
- Modification of operating parameters by PC software as well as the smartphone and tablet app (TROX FlowCheck app)
- Service access for PC configuration software
- Access with a smartphone thanks to NFC interface and Bluetooth
- Setpoint value settings, override controls and parameter adjustment via analogue interface or bus communication
- High data transparency through standardised bus communication Modbus RTU, BACnet MS/TP or MP-Bus

General information	2	Variants	7
Function	4	Technical data	8
Specification text	5	Product details	25
Order code	6	Explanation	36

General information

Application
- All-in-one control device for VAV terminal units for duct pressure control up to 1.81 in. w.g. in ventilation and air conditioning systems
- Static differential pressure transducer and controller electronics combined in one casing
- Separate actuator with spring return
- Safe position can be defined upon failure of the supply voltage or wire breakage in the order code: NC = damper closed, NO = damper in OPEN position
- For use with clean and contaminated air
- Variable duct pressure control by specifying setpoint values via communication interfaces or analogue signal e.g. from the central building management system
- Duct pressure control with constant value by set operating value
- Override controls for activating Δp_{max}, Δp_{min}, shut-off, control stop, OPEN position via Modbus/BACnet register or partly with switch or relay possible
- Duct pressure actual value is available as a network data point or linear voltage signal
- The damper blade position is available as a network data point
- Use the TROX FlowCheck app and PC tool to configure the controller and the communication parameters

Control strategy
- Duct pressure fluctuations are controlled, e.g. by changing volume flow requirements
- To prevent the control from becoming unstable, a dead band is allowed within which the damper blade does not move
- Δp_{min}: selected operating value of minimum duct pressure or constant value
- Δp_{max}: selected operating value of maximum duct pressure
- Operating parameters are set in the factory according to the order code

Interface
Analogue interface
- Analogue interface with adjustable signal voltage range
- Analogue signal for pressure setpoint value
- Analogue signal for actual pressure value

Digital communication interface (bus)
- Modbus RTU, RS-485
- BACnet MS/TP, RS-485
- MP bus
- Data points, see bus lists

Hybrid mode
- Mixed mode of analogue and digital interface

Factory setting
- Setpoint value default setting via analogue interface
- Actual value output via analogue interface and Modbus communication interface

Operating modes
Variable operation (V)
- Setpoint value setting via analogue signal, Modbus, BACnet or MP-Bus: operating range corresponds to Δp_{min} – Δp_{max}

Constant value mode (F)
- A setpoint signal is not required, setpoint value corresponds to Δp_{min}

Operating parameters
- Nominal pressure $\Delta p_{Nominal}$ = 2.01 in. w.g.
- The flow rate range for the controller is set in the factory; Δp_{min}: minimum pressure, 0 – 100 % of $\Delta p_{Nominal}$ adjustable; Δp_{max}: maximum pressure, 20 – 100 % of $\Delta p_{Nominal}$ adjustable Reference
- point for the output signal: $\Delta p_{Nominal}$
- Δp_{min} and Δp_{max} can be factory-set to 90 % of $\Delta p_{Nominal}$ so that adjustment behaviour is fully visible in the output signal
- Observe the variable duct pressure range from 0.1 – 1.81 in. w.g.

Signal voltage ranges
- 0 – 10 V DC
- 2 – 10 V DC

Parts and characteristics
- Transducer for static measurement principle
- Separate overload protection
- Plug-in terminals for power and bus cables, with cover
- Socket for the actuator
- NFC and service interfaces
- Crank handle for manual winding of the spring return actuator
- Release button to allow for manual operation
- Indicator lights for displaying the operating mode
- Addressing button to confirm the addressing request of an MP master (only in MP-Bus mode)
- Controller casing prepared with 4 openings for threaded connections, 2 cable glands M16 x 1.5 for connecting cable in the supply package
- Duct pressure testing set with duct pressure test plug and measuring tube included in supply package
- Controller casing can be opened without tools

Construction
BUPNF with actuator LF24-VST for:
- TVR, TVZ, TVA, TVRK up to NW 10

BUPNF with actuator NF24A-VST for:
- TVJ, TZ-Silenzio, TA-Silenzio all dimensions
- TVR, TVZ, TVA, TVRK for NW 12 - 16
- TVT up to dimension 39.37 × 11.81 or 31.5 × 15.75

Commissioning
- Due to the factory set operating values of the duct pressure, it must always be ensured that the control units are only installed at the intended locations
- Modbus/BACnet/MP bus interface: additional commissioning steps required
- Operating parameters can be adjusted using the TROX FlowCheck app

Useful additions

- TROX FlowCheck app for Android and iOS
- Bluetooth-to-NFC converter ZIP-BT-NFC
- Type ZTH-EU adjustment device (limited use)
- Belimo PC-Tool software

Function

Duct pressure controller (line pressure controller) area of application

Ventilation planning for a larger building often requires a widely branched duct network, with individual building sections being supplied via branch lines of the main duct. Here, a sufficient air supply from the various branch lines must be ensured in all (use-dependent) operating situations, so that the planned ventilation of the respective zones or rooms is guaranteed by the volume flow controllers being used.

In the simplest implementation scenario, (high) volume flow rates are throttled exclusively by terminal volume flow controllers in the zones or rooms. In this way, high differential pressures close to the room can be reduced, but this leads to disadvantages in terms of acoustics and control engineering.

A practical alternative is to regulate the air requirements of the branch line on the basis of demand with an additional control instance – and thus only apply as much differential pressure in the line as is actually required to supply the volume flow controller in this line. This means that only very low differential pressures have to be regulated at the terminal volume flow controllers, which has benefits in terms of accuracy and acoustic performance.

Volume flow controllers cannot be used for this purpose. When volume flow controllers are connected in series in the line and zone or in the room, only one of the controllers assumes the volume flow control (limiting variable) – all others are in the OPEN position. Only a volume flow limiter can be implemented in this way.

Duct pressure controllers should always be used where parallel lines have different static pressure requirements. The static pressure in the individual duct sections/lines should be regulated so that there is always sufficient, demand-based pressure available and unnecessary throttling processes are avoided. The duct pressure controller is parameterised in such a way that it regulates the line pressure only to the point where the volume flow controller can function and the outlet resistances in the zones behind it are overcome. Overall, the use of a duct pressure controller in the line and the use of a terminal volume flow controller for the zone or room result in a system performance that is more stable with better acoustic and energy efficiency properties.

Functioning of a duct pressure controller

A static differential pressure transducer converts the duct pressure into a voltage signal. The differential pressure actual value is available as a voltage signal. The factory setting is such that 10 V DC always corresponds to the nominal differential pressure ($\Delta p_{Nominal}$). The differential pressure setpoint value is either a constant value or it comes from a setpoint adjuster or from switch contacts. The controller compares the differential pressure setpoint value to the actual value and controls the actuator according to the deviation. Differential pressure parameters and signal voltage range are stored in the control component. Changes made by the customer can easily be made with the TROX FlowCheck App, adjustment device or a notebook. If the supply voltage is interrupted or there is a wire breakage, the spring return actuator moves to the OPEN (NO) or CLOSED (NC) safe position that was set at the factory via the order code.

Principle of operation Universal controller for duct pressure control: TVR, TVJ, TVT, TZ-/TA-Silenzio, TVZ, TVA, TVRK

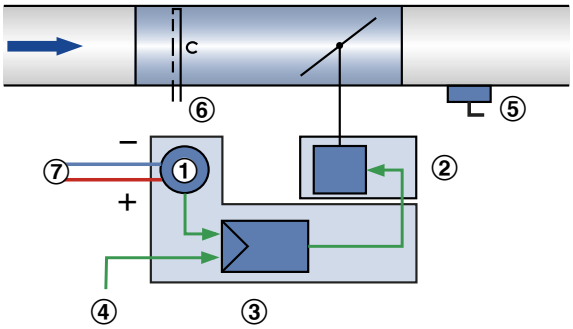

① Differential pressure transducer
② Actuator
③ Differential pressure controller
④ Setpoint value signal or programmed fixed constant value
⑤ Duct pressure tapping point
⑥ Differential pressure sensor of the VAV terminal unit (unused, depending on types and variant possibly not accessible or not available)
⑦ Differential pressure connection at the transducer of the control component, depending on the installation situation (supply air/ exhaust air):

- One connection side for duct pressure measurement - see ⑤
- Other connection side open as reference value

Specification text

This specification text describes the general properties of the product.

Category
- Universal controller for duct pressure with safe position

Application
- Control of a constant or variable duct pressure setpoint
- Electronic controller for applying a reference value and capturing an actual value signal
- The actual value signal relates to the nominal pressure such that commissioning and subsequent adjustment are simplified
- Stand-alone operation or integration with a central BMS

Area of application
- Duct pressure control for ventilation and air conditioning systems in the range of 0.1-1.81 (static transducer integrated)

Actuator
- Spring return actuator for defined safe position of the damper blade in case of power failure
- Run time 120 s for 90°; run time spring return < 20 s for 90°

Installation orientation
- Either direction

Connection
- Pluggable connection terminals; no additional terminal box required

Supply voltage
- 24 V AC/DC

Interface/signalling
Analogue signal:
- 0 – 10 V DC or 2 – 10 V DC,

Bus interface:
- Modbus RTU
- BACnet MS/TP
- MP bus

Interface information
Analogue signal:
- Duct pressure setpoint and actual value

Bus interface:
- Duct pressure setpoint and actual value
- Damper blade position
- Fault status

System connections
MP-Bus for optional extensions
- Gateways for Modbus, BACnet, KNX, e.g. Belimo UK24xxx
- Fan optimiser, e.g. Belimo COU24-A-MP

Special functions
- Activation of Δp_{min}, Δp_{max}, Closed, Open, Control Stop by means of external switch contacts/wiring or bus communication

Parameter setting
Parameters specific to the VAV terminal unit are factory set
- Nominal pressure factory set
- Operating values Δp_{min}, Δp_{max} are factory set
- Signal characteristic is factory-set

Subsequent adaptation possible with
- TROX FlowCheck app (NFC or Bluetooth with optional adapter)
- PC software

Factory condition
- Electronic controller factory mounted on the control unit
- Factory set, certified with sticker
- Controller in OPEN position
- Duct pressure testing set with duct pressure test plug and measuring tube included in supply package

Order code

Control component BUPNF (shown together with TVR as an example)

TVR – D – P1 – / 8 / D2 / BUPNF / PDS / V 0 / 0.2 – 1.41 [in. w.g.] / NO
1 2 3 4 5 6 7 8 9 10 11 12

1 Type
TVR VAV terminal unit

2 Acoustic cladding
No entry: none
D With acoustic cladding

3 Material
No entry: galvanised sheet steel
P1 Powder-coated RAL 7001 (silver grey)
A2 Stainless steel construction

4 Duct connection
No entry: push-fit, suitable for ducts according to EN 1506; with groove for optional lip seal
FL Flanges both ends (not with TVR-D-P1)

5 Nominal size [in.]
4, **5**, 6, 8, 10, 12, 16

6 accessories
No entry: without accessories
D2 Double lip seal both ends (push-fit only)
G2 Matching flanges for both ends (only with FL)

7 Attachments (control component)
BUPNF Universal controller with static transducer and separate spring return actuator for duct pressure control

8 Equipment function/Installation location
PDS Duct pressure control, supply air (Pressure Duct Supply)
PDE Duct pressure controller – extract air (Pressure Duct Extract)

9 Operating mode
F Constant value mode (one setpoint value, no external switch contact)
V Variable operation (adjustable setpoint value range)

10 Signal voltage range
0 0 – 10 V DC
2 2 – 10 V DC

11 Operating values for factory setting
Duct pressure [in.w.g.]

Depending on operating mode
F: Δp_{const}
V: $\Delta p_{min} – \Delta p_{max}$

12 Damper blade position
NO Power off to open (Normally Open)
NC Power off to close (Normally Closed)

Order example: TVR-D-P1/8/D2/BUPNF/PDS/V0/0.2-1.41[in. w.g.]/NO

Type	TVR
Acoustic cladding	With acoustic cladding
Material	Powder-coated RAL 7001 (silver grey)
Duct connection	Push-fit, suitable for ducts according to EN 1506; with groove for optional lip seal
Nominal size	8
Accessories	Double lip seal both ends
Attachments (control component)	BUPNF – Universal controller with static transducer and separate spring return actuator for duct pressure control
Equipment function/installation location	Duct pressure control, supply air (Pressure Duct Supply)
Operating mode	Variable operation
Signal voltage range	0 – 10 V DC
Operating values for factory setting	0.2 – 1.41 [in. w.g.]
Damper blade position	Power off to open (Normally Open)

Variants

Universal controller, Type VRU-M1-M/B TR

① Adaptation key
② Actuator connection socket
③ NFC interface
④ Dummy cover (not in use)
⑤ Cable glands (separate supply and control)
⑥ Fixing holes
⑦ Differential pressure connection

Universal controller, type VRU-***-M/B TR (terminal cover opened)

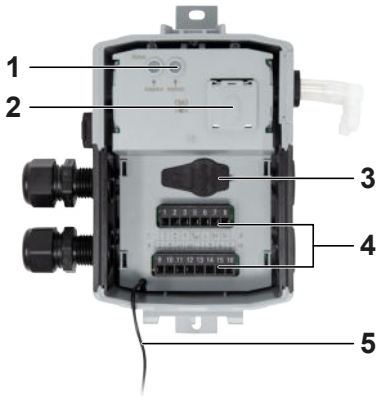

① Yellow status LED; address confirmation (only with MP-Bus operation)
② Magnetic holder for ZIP-BT-NFC
③ Service socket
④ Pluggable terminal strips
⑤ Cover fixing (safety cable)

Actuator with spring return LF24-VST TR

① Axle support
② Actuator total
③ Plug connection for the controller
④ Mechanical end stop for rotation angle
⑤ Direction of rotation of spring return (clockwise here)
⑥ Holder for crank handle for manual winding (locking via abrupt change of direction of rotation)
⑦ Connecting cable

Actuator with spring return NF24A-VST TR

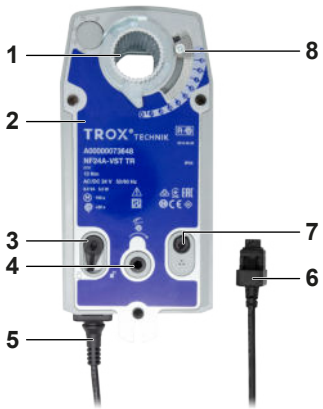

① Axle support
② Actuator total
③ Position lock spring return (e.g. after manual winding using crank handle)
④ Socket for the crank handle
⑤ Connecting cable
⑥ Plug connection for the controller
⑦ No function
⑧ Mechanical end stop for rotation angle

Technical data

Universal controller for VAV terminal units

–	Controller		Actuator		–
Order code detail	Part number	Type	Part number	Type	**VAV terminal units**
BUPNF	A00000073652	VRU-M1-M/B TR	A00000076097	LF24-VST TR	②
BUPNF	A00000073652	VRU-M1-M/B TR	A00000073648	NF24A-VST TR	①

①
TVR, TVZ, TVA, TVRK up to NW 10
②
TVR, TVZ, TVA, TVRK from NW 12
TVJ
TVT up to dimension 39.37 × 11.81 or 31.5 × 15.75

Universal controller, type VRU-M1-M/B TR

Universal controller, type VRU-M1-M/B TR

Type of measurement/installation orientation	static measuring principle, position-independent
Nominal pressure	2 in. w.g.
Pressure regulation range	0.2 – 1.81 in. w.g.
Nominal voltage	AC/DC 24 V
Rated voltage frequency	50/60 Hz
Functional range	19.2 - 28.8 V AC or 21.6 - 28.8 V DC
Power consumption (when running/when idle)	1.5 W
Power requirement dimensioning	2 VA plus connected VST drive
Power consumption dimensioning note	I_{max} 20 A @ 5 ms
Drive connection	AC/DC supply through controller, PP-Link VST drive
Bus connection	**Modbus RTU*,** BACnet MS/TP, MP-Bus
Modbus RTU communication parameters to be set	Baud rate: 9600, 19200, **38400***, 76800, 115200; Address: **1***,2.3 – 247; Parity: **1-8-N-2***, 1-8-N-1, 1-8-E-1, 1-8-O-1; Number of nodes: maximum 32 (without repeater) Terminating resistor: 120 Ω; integrated, switchable
BACnet MS/TP communication parameters to be set	Baud rate: 9600, 19200, **38400***, 76800, 115200; Address: **1***,2.3 – 127; Number of nodes: maximum 32 (without repeater) Terminating resistor: 120 Ω; integrated, switchable
Addressing	Required on site: by smartphone app
Setpoint value signal input (analogue optional)	0 - 10 V DC, 2 - 10 V DC Input resistance 100 kΩ
Actual value signal output	0 - 10 V, 2 - 10 V, maximum 0.5 mA
Protection class IEC/EN	III (Protective extra-low voltage)
Protection level	IP 42
EMC	CE according to 2014/30/EU
Weight	0.66 lbs

* Factory setting.

Actuator with spring return LF24A-VST TR

Actuator with spring return LF24A-VST TR

Power supply	from the controller
Power consumption – when running	2.5 W
Power requirement dimensioning	5 VA
Self-consumption (idle state)	1 W
Torque	4 Nm
Run time for 90°	120 s/90°
Running time emergency control function	< 20 s/90°
Setpoint value signal input	from the controller
IEC protection class	III (Protective extra-low voltage)
Protection level	IP 54
EMC	EMC to 2014/30/EU
Weight	3.7 lbs
Manual adjustment	by hand crank; locking by counter-rotation

Actuator with spring return NF24A-VST TR

Actuator with spring return NF24A-VST TR

Power supply	from the controller
Power consumption – when running	5 W
Power requirement dimensioning	8 VA
Self-consumption (idle state)	2.5 W
Torque	10 Nm
Run time for 90°	120 s/90°
Running time emergency control function	< 20 s/90°
Setpoint value signal input	from the controller
IEC protection class	III (Protective extra-low voltage)
Protection level	IP 54
EMC	EMC to 2014/30/EU
Weight	5.07 lbs
Manual adjustment	by hand crank and locking switch

Meaning of the green status LED/push button (applies to all VRU control components)

LED/push button (green)	Meaning
ON	Power supply ok - Normal operation
blinking	in operation - status message pending*
at the press of the button	Trigger rotation angle adaptation, then normal operation

*** Status message pending:** signals a pending status message, whereby the type of fault is not specified. For a concrete evaluation of this collective fault message, a query must be made using service tools or the bus interface:

- Belimo Assistant app, TROX FlowCheck app or Belimo PC-Tool software
- MP-Bus command, Modbus register, BACnet object

Meaning of the yellow status LED/push button (applies to all VRU control components)

LED/push button (yellow)	Meaning
blinking	MP-Addressing
at the press of the button	Confirmation of addressing

Commissioning

- Due to the factory-set operating values, it must always be ensured that the control units are only installed in the intended locations
- Install control unit in the duct section to be controlled
- Set up a pressure measurement point

For supply air:

- Connect the positive connection point of the controller to the duct to be controlled
- Leave the negative connection of the controller open

For extract air:

- Leave the positive connection point of the controller open
- Connect the negative connection of the controller to the channel to be controlled
- The duct connection has to be on the side facing away from the fan
  - Observe the duct pressure control range according to the technical data
  - Establish electrical wiring connection
  - The controller is then ready for use
- Only briefly remove the protective cap of the control component during wiring

For bus operation, further commissioning steps are required depending on the required integration of the control component into the local network:

For operation with Modubus interface

- Switching the setpoint to bus with the service tool
- Bus protocol is already set in the factory from Modbus RTU; no adjustment required
- Adjust Modbus participant address and communication settings

For operation with BACnet interface

- Switching the setpoint to bus with the service tool
- Switch bus protocol to bus with service tool
- Adjust BACnet subscriber address and communication settings

For operation with MP-BUS interface

- Switching the setpoint to bus with the service tool
- Switch bus protocol to MP-Bus with service tool
- For operation with MP-Bus interface in existing systems as a replacement for VRP-M controllers: Activation of VRP-M compativity mode required

Functional scope of service tools

Function/parameter setting	Smartphone app	PC-Tool [1]	ZTH-EU
Setting Δp_{min}, Δp_{max}	R, W [2]	R, W	R, W
Setting signal voltage range for Analogue interface 0 - 10 V, 2 - 10 V DC	R, W [2]	R, W	–
Setpoint value default setting via analogue connection or bus (Modbus, BACnet or MP bus)	R, W [2]	R, W	–
Modbus, BACnet settings (address, communication parameters)	R, W [2]	R, W	–
MP-Bus settings (address)	R, W [2]	R, W	–
Execute override controls (test function)	R, W [3]	–	–
Trend display	R, W [3]	yes	–

R, W = function is readable and writable
- = Function is not available for the service tool

[1] Requires interface converter, e.g. setting devices ZTH-EU
[2] Function/parameterisation is possible without connecting the controller to supply voltage
Function/parameterisation only in conjunction with ZIP-BT-NFC **and** connected power supply to the controller
For the proper use of the service tools, they should always be kept up to date with the latest software version.
Information on current versions/updates for PC-Tool software and setting device ZTH-EU on the Belimo homepage www.belimo.com.
Minimum versions for ZTH-EU firmware: V 2.09.0004

Modbus RTU communication interface

Number	Register Address	Description	Range Enumeration	Unit	Scaling	Access
1	0	Setpoint value between $q_{vmin}/\Delta p_{min}$ (reg. address 105) and $q_{vmax}/\Delta p_{max}$ (reg. address 106) (*1) (*2) (*3) (*4)	0 – 10,000 Factory setting: 0	%	0.01	[R / W]
2	1	Override control Overwrites the setpoint value with override control	0: None 1: OPEN 2: CLOSED 3: $q_{vmin}/\Delta p_{min}$ 5: $q_{vmax}/\Delta p_{max}$ Factory setting: None	–	–	[R / W]
3	2	Command triggering Triggering of functions for service and test purposes. Command ends automatically with 0	0: None 1: Adapting 3: Synchronisation Factory setting: None	–	–	[R / W]
4	3	Type of actuator (*5)	0: Actuator not connected/not known 1: Actuator Air/Water with/without safety function 2: Volume flow controller VAV/EPIV 3: Fire damper 4: Energy Valve 5: 6way EPIV	–	–	[R]
5	4	Current damper blade position acc. to mechanical limits (*5)	0 – 10,000	%	0.01	[R]
6	5	Blade angle acc. to angle range (*5)	0 – 9,600	°	0.01	[R]
7	6	Relative volume flow rate related to q_{vnom} (reg. address 110) (*6)	0 – 15,000	%	0.01	[R]
8	7	Absolute volume flow rate (*6)	0 – q_{vnom}	cfm	1	[R]
9	8	Sensor value (voltage, resistance, switch) Value dependent on the setting of the sensor type (reg. address 107)	0 – 65,535	mV, Ω, 0/1	0.1	[R]
10	9	–	–	–	-	[–]
11	10	Absolute volume flow rate in selected volume flow unit acc. to (reg. address 117) (Low word) < 16 of 32 bit (*6)	0 – 500,000,000	UnitSel	0.001	[R]
12	11	Absolute volume flow rate in selected volume flow unit acc. to (reg. address 117) (High word) > 16 of 32 bit (*6)	0 – 500,000,000	UnitSel	0.001	[R]
13	12	Analogue setpoint value	0 – 10,000	%	0.01	[R]

Number	Register Address	Description	Range Enumeration	Unit	Scaling	Access
		Shows the setpoint value in % with analogue control input signal. Active if reg. address 118 = 0 (analogue)				
51		Relative differential pressure According to application case as per (reg. address 128)	0 – 20,000	%	0.01	[R]
52		Absolute differential pressure	-4.01 – 60.22	[in. w.g.]	0.1	[R]
53		–	–	–	–	[–]
54		Absolute differential pressure in selected unit (reg. address 145) (Low word) < 16 of 32 bit	-10,000,000 – 100,000,000	UnitSel	0.001	[R]
55		Absolute differential pressure in selected unit as per (reg. address 145) (High word) > 16 of 32 bit	-10,000,000 – 100,000,000	UnitSel	0.001	[R]
100	99	Bus terminal resistor Indicates whether the terminal resistor (120 Ω) is active or deactivated. Can only be set using service tools.	0: Not active 1: Active Factory setting: Not active	–	–	[R]
101	100	Serial number, part 1 Example: 00839-31324-064-008 1st part: 00839 2st part: 31324 3st part: 008	–	–	–	[R]
102	101	Serial number, part 2	–	–	–	[R]
103	102	Serial number, part 3	–	–	–	[R]
104	103	Firmware version Example: 101, version 01.01.	–	–	–	[R]
105	104	Malfunctions and service information – automatic reset if status has ceased	Bit 0: – Bit 1: Mechanical travel too high Bit2: Actuator cannot be moved (e.g. mechanical overload) Bit 3: – Bit 4: Error of dP sensor Bit 5: Return air flow detected Bit 6: Volume flow rate too low Bit 7: Flow rate in closed position Bit 8: Internal activity (e.g. test run, adaptation) Bit9: Gear release active Bit10: Bus monitoring triggered Bit 11: Actuator not suitable for application Bit 12: Pressure sensor incorrectly connected Bit 13: Pressure sensor not reached Bit 14: Error in dP sensor outside of measuring range	–	–	[R]
106	105	Setting work areas $q_{vmin}/\Delta p_{min}$ Requirements: $q_{vmin}/\Delta p_{min} < q_{vmax}/\Delta p_{max}$ Vmax in the area 0 – 100 % of $q_{vnom}/\Delta p_{nominal}$	0 – $q_{vmax}/\Delta p_{max}$	%	0.01	[R / W*]
107	106	Setting work areas $q_{vmax}/\Delta p_{max}$ Requirements: $q_{vmax}/\Delta p_{max} < q_{vmin}/\Delta p_{min}$	2,000–10,000	%	0.01	[R / W*]

Number	Register Address	Description	Range Enumeration	Unit	Scaling	Access
		Vmax in the area 20 – 100 % of q_{vnom}/ $\Delta p_{nominal}$				
108	107	Type of sensor If reg. address 118 = 0 (analogue), then reg. address 107 = 1 (active) for mV	0: None 1: Active 2: Passive 3: – 4: Switch Factory setting: None	–	–	[R / W*]
109	108	Bus timeout monitoring If there is a bus timeout, the actuator moves into a position specified here. The position is mech. limited, q_{vmin}/ Δp_{min} and q_{vmax}/Δp_{max} have no impact. Release if no change takes place in reg. address 1 or reg. address 2 in the specified time for reg. address 109. Display of release in reg. address 104. In hybrid mode, bus timeout activation is deactivated. Bus timeout time: acc. to reg. address 109	0 – 10,000 Factory setting: 0	%	0.01	[R / W*]
110	109	Time until release bus timeout monitoring If reg. 108 ≠ 0, then the initial automatic status is reg. 108 = 120 s.	0 – 3,600 0: Inactive Factory setting: Deactivated	s	1	[R / W*]
113	112	Nominal volume flow rate in selected volume flow unit acc. (reg. address 117) (Low word) < 16 of 32 bit	0 – 60,000,000	UnitSel	0.001	[R]
114	113	Nominal volume flow rate in selected volume flow unit acc. (reg. address 117) (High word) > 16 of 32 bit	0 – 60,000,000	UnitSel	0.001	[R]
115	114	–	–	–	–	[–]
116	115	–	–	–	–	[–]
117	116	Control mode	0: Position control (open loop) 1: Volume flow control Factory setting: Volume flow control	–	–	[R]
118	117	Unit selection – Unit selection for reg. address 11 and 12	0: – 1: m³/h 2: l/s 3: – 4: – 5: – 6: cfm	-	–	[R / W*]
119	118	Setpoint value setting If reg. address 118 = 0 (analogue), then reg. address 12 = active. If reg. address 118 = 1 (Bus), then reg. address 1 = active.	0: Analogue (0 – 10 V, 2 – 10 V) 1: Bus (Modbus, BACnet, MP-Bus) Factory setting: Analogue	–	–	[R / W*]

Number	Register Address	Description	Range Enumeration	Unit	Scaling	Access
120		Pressure operating mode Only for VRU-M1R-M/B TR.	0: Negative pressure 1: Positive pressure	–	–	[R / W*]
121		–	–	–	–	[–]
122		–	–	–	–	[–]
123		–	–	–	–	[–]
124		Room pressure cascade release Only available if reg. address 124 = 0 (volume flow control) or 2 (room pressure control).	0: Inactive 1: Active 2: Active fast (only for VRU-M1R-M/B TR)	–	–	[R]
125		Applications	0: Volume flow control 1: Pressure control 2: Room pressure control 3: Flow measurement	–	–	[R]
126		Unit height	0 – 9,842.52 Factory setting: 0	ft	1	[R / W*]
127		Nominal differential pressure in the selected unit as per (reg. address 145) More info in (reg. address 128)	D3: 0 – 50000 M1: 0 – 60000 M1R: 0 – 60000	UnitSel	–	[R]
128		–	–	–	–	[–]
129		Nominal differential pressure in in. w.g. If reg. address 124 = 0 (volume flow control), then reg. address 110 as q_{vnom}. If reg. address 124 = 1 (differential pressure control) or 2 (room pressure control), then the maximum is defined by the diff. pressure.	D3: 0 – 2 M1: 0 – 2 M1R: 0 – 3	in. w.g.	0.1	[R]
146		Selection of the pressure unit The selected unit is displayed in (reg. address 126).	0: Inches of Water Gauge 1: – 2: Water column Factory setting: Inches of Water Gauge	–	–	[R / W*]

[R] = Read-only access to register
[R/W] = Register readable and writable
[R/W*] = Register readable and writeable with restrictions; all writeable registers from 100 are persistent (stored in the EEPROM), regular or cyclical writing must be avoided.

(*1) If reg. addr. 118 = 1 (bus), then reg. addr. 0 = active
(*2) If reg. addr. 124 = 0 (flow rate control), then reg. addr. 0 = flow rate
(*3) If reg. addr. 124 = 0 (volume flow control) and reg. addr. 116 = 0 (position control), then reg. addr. = damper blade position
(*4) If reg. addr. 124 = 1 (differential pressure control) or 2 (room pressure control), then reg. addr. = pressure
(*5) If reg. addr. 124 = 2 (room pressure control) or 3 (volume flow measurement), then reg. addr. = deactivate 65.535
(*6) If reg. addr. 124 = 1 (differential pressure control) or 2 (room pressure control), then reg. addr. = deactivate 65.535

BACnet MS/TP - Protocol Implementation Conformance Statement - PICS (General information)

Date	2020-06-11
Vendor Name	TROX GmbH
Vendor ID	329
Product Name	VRU-D3-BAC, VRU-M1-BAC, VRU-M1R-BAC
Product Model Number	VRU - BAC
Applications Software Version	01.02.0001
Firmware revision	10.02.0000
BACnet Protocol Revision	12
Product Description	Controller for VAV/CAV and pressure applications
BACnet Standard Device Profile	BACnet Application Specific Controller (B-ASC)
BACnet Interoperability Building Blocks supported	Data Sharing – ReadProperty-B (DS-RP-B) Data Sharing – ReadPropertyMultiple-B (DS-RPM-B) Data Sharing – WriteProperty-B (DS-WP-B) Data Sharing – WritePropertyMultiple-B (DS-WPM-B) Data Sharing – COV-B (DS-COV-B) Device Management – DynamicDeviceBinding-B (DM-DDB-B) Device Management – DynamicObjectBinding-B (DM-DOB-B) Device Management – DeviceCommunicationControl-B (DM-DCC-B)
Segmentation Capability	No
Data Link Layer Options	MS/TP master, baud rates: 9600, 19200, 38400, 76800, 115200
Device Address Binding	No static device binding supported
Networking Options	None
Character Sets Supported	ISO 10646 (UTF-8)
Gateway Options	None
Network Security Options	Non-secure device

Communication interface BACnet MS/TP - Object processing

Object type	Optional properties	Writeable properties
Analog Input [AI]	Description COV Increment	COV Increment
Analog Output [AO]	Description COV Increment	Present Value COV Increment Relinquish Default
Analog Value [AV]	Description COV Increment	Present Value COV Increment
Binary Input [BI]	Description Active Text Inactive Text	
Device	Description Location Active COV Subscriptions Max Master Max Info Frames Profile Name	Object identifier Object Name Location Description APDU Timeout (1000 – 60000) Number Of APDU Retries (0 – 10) Max Master (1 – 127) Max Info Frames (1 – 255)
Multi-state Input [MI]	Description State Text	
Multi-state Output [MO]	Description State Text	Present Value Relinquish Default
Multi-state Value [MV]	Description State Text	Present Value (if marked)

Editing of services

- The unit does not support the services "Create object" and "Delete object".
- The specified maximum length of writable strings is based on single-byte characters.

1. Object name 32 characters
2. Location 64 characters
3. Description 64 characters

- The unit supports DeviceCommunicationControl services, no password required.
- A maximum of 6 active COV subscriptions with a runtime of 1 - 28800 s (maximum 8 h) are supported.

Communication interface BACnet MS/TP - BACnet objects

Object Name	Object Type	Description	Values	COV Increment	Access
Device	Device [Inst.No]		0 – 4,194,302 Factory setting: 1	–	WR
RelPos	AI[1]	Damper blade position in % Status flags: (*1), (*2)	0 – 100	0.01 – 100 Factory setting: 1	RD
AbsPos	AI[2]	Absolute position in ° Angular position corresponding to the entire rotation range. Status flags: (*1), (*2)	0 – max. angle	0.01 – 90 Factory setting: 1	RD
SpAnalogue	AI[6]	Analogue setpoint value in % Shows the analogue setpoint value according to the selected application flow rate, pressure, damper blade position as per ApplicationSel MV[2]. If setpoint value setting in SpSource MV[122] = 1 (analogue), then SpAnalog AI[6] = active. The analogue setpoint value is limited by Min AV[97] and Max AV[98]. Status flags: (*1), (*3)	0 – 100	0.01 – 100 Factory setting: 1	RD
RelDeltaP	AI[9]	Relative differential pressure in % with respect to DeltaPnom_in.w.g. AV[122]	0 – 150	0.01 – 150 Factory setting: 1	RD
RelFlow	AI[10]	Relative volume flow rate in % related to Vnom_cfm AV[112] Status flags: (*4)	0 –88.29	0.01 – 150 Factory setting: 1	RD
AbsFlow_cfm	AI[12]	Absolute volume flow rate in cfm Status flags: (*4	0 – 35,314.62	1 – 35,314.62 Factory setting: 10	RD
DeltaP_UnitSel	AI[18]	Absolute differential pressure in selected unit as per UnitSelPressure MV[127]	-10,000 – 100,000	0.001 – 100,000 Factory setting: 1	RD
AbsFlow_UnitSel	AI[19]	Absolute volume flow rate in selected unit as per UnitSelAirFlow MV[121] Status flags: (*4)	0 – 500,000	0.01 – 500,000 Factory setting: 1	RD
Sens1Analogue	AI[20]	Sensor 1 as analogue value If Sensor1Type MV[220] = 2 (active), then display = analogue value in 0 – 10 V. If Sensor1Type MV[220] = 3 (passive), then display = resistance value. If RmPCascade MV[10] = 2 (enabled) or 3 (quickly enabled), then the sensor input is not	0 – 65535	0.01 – 1000 Factory setting: 1	RD

Object Name	Object Type	Description	Values	COV Increment	Access
		available. Status flags: (*5)			
DeltaP_in.w.g.	AI[29]	Absolute differential pressure in in. w.g.	0 – 2.41	0.01 – 2.41 Factory setting: 10	RD
SpRel	AO[1]	Relative setpoint value in % The rel. setpoint value depends on the application (flow rate/pressure/ damper blade position). If SpSource MV[122] = 2 (bus), then SpRel AO[1] = active. The analogue setpoint value is limited by Min AV[97] and Max AV[98]. Status flags: (*1), (*2)	0 – 100 Factory setting: 0	0.01 – 100 Factory setting: 1	C
Min	AV[97]	Minimum setpoint value in % (q_{vmin}/ P_{min}) Requirement: $q_{vmin}/\Delta p_{min} < q_{vmax}/\Delta p_{max}$ $q_{vmin}/\Delta p_{min}$ in the range 0 - 100 & q_{vnom}/ Δp_{nom}	0 – $q_{vmax}/\Delta p_{max}$	0.01 – 100 Factory setting: 1	WR
Max	AV[98]	Maximum setpoint value in % (q_{vmax}/ P_{max}) Requirement: $q_{vmax}/\Delta p_{max} > q_{vmin}/\Delta p_{min}$ q_{vmax}/P_{max} in the range 20 - 100 % of q_{vnom}/P_{nom}	$q_{vmin}/\Delta p$ – 100	0.01 – 100 Factory setting: 1	WR
Vnom_cfm	AV[112]	Nominal volume flow rate in cfm	0 –29,428.85	0.01 – 29,428.85 Factory setting: 1	RD
Vnom_UnitSel	AV[119]	Nominal volume flow rate in selected unit as per UnitSel MV[121]	0 – 250,000	0.01 – 1,000: Factory setting: 1	RD
SystemAltitude	AV[120]	System altitude in feet above sea level	0 – 9,842.52	1 – 9,842.52 Factory setting: 10	WR
DeltaPnom_in.w.g.	AV[122]	Nominal differential pressure in in. w.g. The nominal differential pressure depends on the selected pressure sensor (D3, M1, M1R). Depending on the selected application, the nominal differential pressure serves as dp@Vnom or as the maximum pressure limitation If ApplicationSel MV[2] = 1 (flow control), then display = nominal differential pressure If ApplicationSel MV[2] = 2 (pressure control) or 3 (room pressure control), then display = max. pressure limitation	D3: 0 – 2 M1: 0 – 2 M1R: 0 – 0.3	1 – 2 Factory setting: 1	RD

Object Name	Object Type	Description	Values	COV Increment	Access
DeltaPnom_UnitSel	AV[129]	Nominal differential pressure in selected unit as per UnitSelPressure MV[127] More infos: see AV[122].		0.01 – 1000 Factory setting: 1	RD
BusWatchdog	AV[130]	Time until the release bus timeout monitoring in s If BusWatchdog AV[130] ≠ 0, then monitoring of SpRel AO[1] and override MO[1] for change. If changes in SpRel AO[1] and override MO[1], then reset the bus timeout monitoring. If SpSource MV[122] = 1 (analogue), then BusWatchdog AV[130] only takes account of override MO[1].	0 – 3600 s Factory setting: 0 (bus timeout monitoring deactivated)	0.01 – 1000 Factory setting: 1	WR
Sens1Switch	BI[20]	Switch status of the switch at the sensor input If SenType MV[220] = 5 (switch), then Sens1Switch BI[20] = active. Status flags: (*6)	0: Inactive 1: Active	–	RD
BusTermination	BI[99]	Terminal resistor Shows whether the terminal resistor (120 Ω) has been activated via the service tools.	0: Deactivated 1: Activated	–	RD
SummaryStatus	BI[101]	Condensed status Groups together the status of the objects: "StatusSensor" MI[103] "StatusFlow" MI[104] "StatusActuator" MI[106] "StatusPressure" MI[109] "StatusDevice" MI[110]	Not equal to 1: OK 1: Not OK	–	RD
RmPCasacade	MV [10]	Room pressure cascade If RmPCascade MV[10] = 2 (active) or 3 (active fast), then sensor1 is the input for the room cascade (0 – 10 V). If ApplicationSel MV[2] =1 (volume flow control) or 3 (room pressure control), then RmPCascade MV [10] = active. Status flags: (*7)	1: Inactive 2: Active 3: Active fast (for M1R only)	–	RD
InternalActivity	MI[100]	Internal status	1: None 2: – 3: Adaption 4: Synchronisation	–	RD

Object Name	Object Type	Description	Values	COV Increment	Access
StatusSensor	MI[103]	Status of the differential pressure sensor If status end = automatic reset	1: OK 2: dP sensor not OK 3: dP sensor outside of measuring range 4: dP sensor incorrectly connected	–	RD
StatusFlow	MI[104]	Volume flow rate status If there is no volume flow rate within 600 s, then StatusFlow MI[104] = 3.	1: OK 2: – 3: No airflow detected	–	RD
StatusActuator	MI[106]	Status of the actuator Status flags: (*2)	1: OK 2: Actuator cannot be moved 3: Gear release active 4: Mechanical travel exceeded 5: Actuator not suitable for application	–	RD
StatusPressure	MI[109]	Differential pressure status If the differential pressure is not reached within 180 s, then StatusPressure MI[109] = 3.	1: OK 2: – 3: Pressure not reached	–	RD
StatusDevice	MI[110]	Status of the device during bus monitoring According to BusWatchdog AV[130].	1: OK 2: Bus timeout monitoring activated	–	RD
Override	MO[1]	Override control Overwrites the setpoint value with a forced command. Status flags: (*8)	1: None 2: OPEN 3: CLOSED 4: q_{vmin}/Δpmin 5: – 6: q_{vmax}/Δpmax Factory setting: None (1)	–	C
ApplicationSel	MV[2]	Display of application VRU-D3-M/B TR, VRU-M1-M/B TR - Flow control - Pressure control - Flow measurement VRU-M1R-M/B TR - Room pressure control	1: Flow control 2: Pressure control 3: Room pressure control 4: Flow measurement	–	RD
ControlMode	MV[100]	Control mode Status flags: (*9)	1: PosCtrl 2: FlowCtrl Factory setting: FlowCtrl	–	RD
OperationMode	MV[102]	Operating mode Only relevant for VRU-M1R-BAC. Status flags: (*10)	1: Negative pressure 2: Positive pressure	–	WR
Command	MV[120]	Release test functions Status flags: (*2)	1: None 2: Adaption 3: – 4: Reset Factory setting: None	–	WR
UnitSelAirFlow	MV[121]	Selection of the volume flow unit	1: – 2: m³/h 3: l/s	–	WR

Object Name	Object Type	Description	Values	COV Increment	Access
		The selected unit is indicated in AI[19] and AV[104]	4: – 5: – 6: – 7: cfm		
SpSource	MV[122]	Selection of the setpoint value setting If SpSource MV[122] = 1 (analogue), then SpAnalog AI[6] = active. If SpSource MV[122] = 2 (bus), then SpRel AO [1] = active.	1: Analogue (0 – 10 V, 2 – 10 V) 2: Bus (Modbus, BACnet, MP-Bus) Factory setting: Analogue	–	WR
UnitSelPressure	MV[127]	Selection of the pressure unit The selected unit is indicated in DeltaP_UnitSel AI[18] and DeltaPnom_UnitSel AV[129].	1: Pascal 3: Water column Factory setting: pascal	–	WR
UnitSelTemp	MV[128]	Selection of temperature unit The selected unit is located in AI[20].	1: K 2: °C 3: °F Factory setting: °C (2)	–	W
Sens1Type	MV[220]	Definition of the sensor type If Sens1Type MV[220] = 2 (active) or 3 (passive), then Sens1Analog AI[20] active. If Sens1Type MV [220] = 5 (switch), then Sens1Schalter BI[20] active.	1: None 2: Active sensor (in hybrid mode) 3: Passive sensor 4: – 5: Switch Factory setting: None	–	WR

RD = Read-only access
WR = Read/write access
C = Commendable with priority array
Status flags:
(*1) If gear disengagement pressed, then Overridden = 1
(*2) If ApplicationSel MV[2] = 3 (room pressure control) or 4 (flow measurement), then Out of Service = 1
(*3) If SpSource MV[122] = 2 (bus), then Out of Service = 1
(*4) If ApplicationSel MV[2] = 2 (pressure control) or 3 (room pressure control), then Out of Service = 1
(*5) If Sens1Type MV[220] = 1 (none), then Out of Service = 1
(*6) If Sens1Type MV[220] ≠ 5, then Out of Service = 1
(*7) If ApplicationSel MV[2] = 2 (pressure control) or 4 (flow measurement), then Out of Service = 1
(*8) If ApplicationSel MV[2] = 4 (flow measurement), then Out of Service = 1
(*9) If ApplicationSel MV[2] ≠ 1 (flow rate control), then Out of Service = 1
(*10) If ApplicationSel MV[2] ≠ 3 (room pressure control), then Out of Service = 1

Product details

Analogue interface 0 – 10 V DC or 2 – 10 V DC

In the delivery state, the setpoint must be specified via the analogue interface. If the setpoint value is specified via a digital communication interface, this can be changed to Modbus, BACnet or MP-Bus at any time via the TROX FlowCheck App. The analogue interface can be set for the signal voltage range 0 - 10 V DC or 2 - 10 V DC through the TROX FlowCheck App. The assignment of the channel pressure setpoint or actual value to the voltage signal is shown in the characteristic diagrams.

Setpoint value setting

Variable operation

- In the variable operating mode, the setpoint is specified with an analogue signal at terminal 3. Setpoint specifications via the respective bus system are rejected
- Selected signal voltage range 0 - 10 V or 2 - 10 V DC is assigned to the set pressure range Δp_{min} – Δp_{max} assigned to
- Pressure range Δp_{min} – Δp_{max} set at the factory according to the order code details
- Subsequent adjustment of Δp_{min} or Δp_{max} possible via adjustment device, TROX FlowCheck app or PC tool

Constant value mode

- In the operating mode fixed value operation, no analogue signal is required at terminal 3
- The value determined by Δp_{min} the set fixed duct pressure value is controlled
- Pressure value Δp_{min} set at the factory according to the order code details
- Subsequent adjustment of Δp_{min} possible via adjustment device, TROX FlowCheck app or PC tool

Override control

For special operating situations, the duct pressure regulator can be set to a special operating state (override control). Possible are: Regulation Δp_{min}, regulation Δp_{max}, damper blade open (OPEN), damper blade closed (CLOSED) or control stop.

Override controls via signal input Y or override control inputs z1, z2

Through suitable wiring of the inputs Y, z1, z2, the override controls can be activated according to the wiring diagrams via wiring with external switching contacts/relays (see wiring examples).

Override controls via command signal at signal input Y

For signal voltage range 0 - 10 V DC

- P_{min} – P_{max}: 0 - 10 V DC
- No shut-off: Damper CLOSED via signal input Y

For signal voltage range 2 - 10 V DC

- Flap CLOSED: Y < 0.3 V DC
- P_{min}: Y > 0.4 V DC
- P_{min} – P_{max}: 2 - 10 V DC

Actual value as feedback for monitoring or tracking control

- The actual pressure measured by the controller can be tapped as a voltage signal at terminal 5
- Selected signal voltage range 0 - 10 V DC or 2 - 10 V DC is applied to the pressure range 0 - $\Delta p_{Nominal}$ in. w.g.
- depicted Reference point $\Delta p_{Nominal}$ = 2.01 in. w.g.
- In analogue mode, there is the parallel option of querying operating data via the Modbus interface (hybrid mode)

Override controls in analogue mode via Modbus or BACnet interface

If the bus interface is also connected in analogue mode, override control can also be specified via Modbus register 1 or BACnet Object MO[1].

Override control for diagnosis

Activation via TROX FlowCheck App.

Prioritisation of different default options

- Specifications for override controls via analogue are prioritised over Modbus/BACnet specifications
- Highest priority: Preset via analogue override control
- Medium priority: Specifications via the service plug (setting device, PC software) for test purposes
- Lowest priority: Default via Modbus/BACnet/MP-BUS

Analogue hybrid operation

- With analogue setpoint input via terminal 3 and analogue feedback via terminal 5, feedback via BACnet MS/TP or Modbus RTU is still possible
- The factory default setting for the bus interface is Modbus RTU; however, this can be changed via TROX FlowCheck App or PC-Tool
- Various operating parameters can be called up according to the bus interface list via Modbus RTU or BACnet MS/TP
- Forced controls Δp_{min}, Δp_{max}, control damper in open position (OPEN) or control damper closed (CLOSED) possible via bus interface

Digital communication interface

For a setpoint value specification via the bus interface, an on-site conversion with the TROX FlowCheck App is necessary. The bus interface can be set to Modbus, BACnet and MP-Bus. For smooth data exchange in the on-site bus network, it is necessary to set the communication parameters and the participant address for the bus interface. The communication parameters of the bus systems (address, baud rate, etc.) can be set using the TROX FlowCheck app. The interface provides standardised bus register/object access to the available data points.

Setpoint value setting

- In Modbus RTU operating mode (factory setting), the setpoint is specified by entering the pressure setpoint [%] in Modbus register 0
- In the BACnet MS/TP operating mode, the setpoint is specified by specifying the pressure setpoint [%] in the BACnet object AI[1]
- The transferred percentage value relates to the value given by Δp_{min} – Δp_{max} defined pressure range
- Pressure ranges Δp_{min} – Δp_{max} set at the factory according to the order code details
- Subsequent adjustment of Δp_{min} or Δp_{max} possible via setting device, TROX FlowCheck App, PC tool or via Modbus/BACnet interface

Actual value as feedback for monitoring or tracking control

- Both in Modbus and in BACnet, the actual values can be read in in. w.g. (factory setting)
- In addition to the pressure value, further information can be read out via other Modbus registers/BACnet objects
- Overview of the registers/objects in the communication tables
- For diagnostic purposes, the actual pressure value can be tapped at terminal 5 during bus operation
- The pressure range 0 - $\Delta p_{Nominal}$ always corresponds to the signal voltage range (0)2– 10 V DC
- Reference point $\Delta p_{Nominal}$ = 2.01 in. w.g.

Override control

For special operating situations, the duct pressure controller can be put in a special operating mode (override control). Possible are: Regulation Δp_{min}, regulation $\Delta p_{max}$the control damper is in open position (OPEN), control damper closed (CLOSED) or control stop.

Priority control via the bus

Specifications are made via Modbus register 1 or via BACnet Object Type MO[1].

Override control by bus failure monitoring (Modbus)

In case of failure of the Modbus communication for a defined period of time, a predefined operating state Δp_{min}, Δp_{max}, OPEN or CLOSED can be activated.

- The override to be activated in case of bus failure is defined via Modbus register 108 or 109
- The determination after which bus failure time the override control is activated is made via Modbus register 109 or 110
- Any Modbus communication resets the bus failure monitoring timeout

Override control by bus failure monitoring (BACnet)

If BACnet communication fails for a specified period of time, a predefined operating state can be activated.

- The setpoint to be activated in the event of bus failure is determined via the Reliquish_Default of SpRel (Object AO1)
- Bus failure time is defined via BusWatchdog (object type AV [130])
- Communication on the data points SpRel (Object AO[1] and Override (Object MO[1]) resets the timeout of bus failure monitoring

Override controls for diagnosis

Activation via bus systems, external/on-site switching contacts (bridges) and TROX FlowCheck App.

Prioritisation of different default options

Specifications for override controls via switching contacts are prioritised over Modbus/BACnet specifications.

- Highest priority: Preset via override control by external wiring (switching contact, relay)
- Medium priority: Specifications via the service plug (TROX FlowCheck App) for test purposes
- Lowest priority: Default via Modbus/BACnet/MP bus

Characteristic of the setpoint value signal

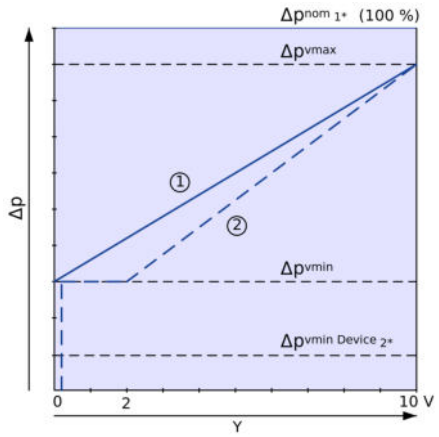

① Signal voltage range 0 – 10 V
② Signal voltage range 2 – 10 V
1* = $\Delta p_{Nominal}$ Nominal pressure difference
2* = $\Delta p_{minUnit}$ minimum adjustable pressure difference

Characteristic of the actual value signal

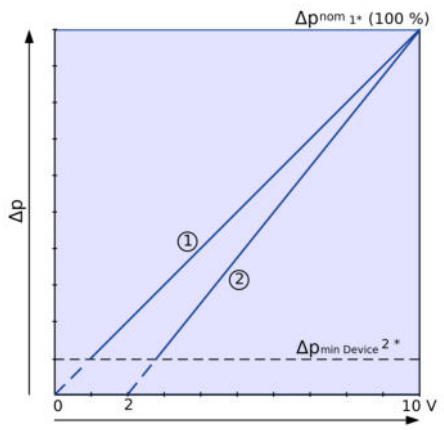

① Signal voltage range 0 – 10 V
② Signal voltage range 2 – 10 V
1* = $\Delta p_{Nominal}$ Nominal pressure difference
2* = $\Delta p_{min\ device}$ minimum adjustable pressure difference

Calculation of differential pressure setpoint at 0 - 10 V

$$\Delta p_{set} = \frac{w}{10}\,(\Delta p_{max} - \Delta p_{min}) + \Delta p_{min}$$

Calculation of differential pressure actual value at 0 - 10 V

$$\Delta p_{act} = \frac{U5}{10} \times \Delta p_{nom}$$

Calculation of differential pressure setpoint at 2 - 10 V

$$\Delta p_{Set} = \frac{w-2}{8}\,(\Delta p_{max} - \Delta p_{min}) + \Delta p_{min}$$

Calculation of actual differential pressure at 2 - 10 V

$$\Delta p_{act} = \frac{U5-2}{8} \times \Delta p_{nom}$$

View of plug-in terminal strips at the VRU

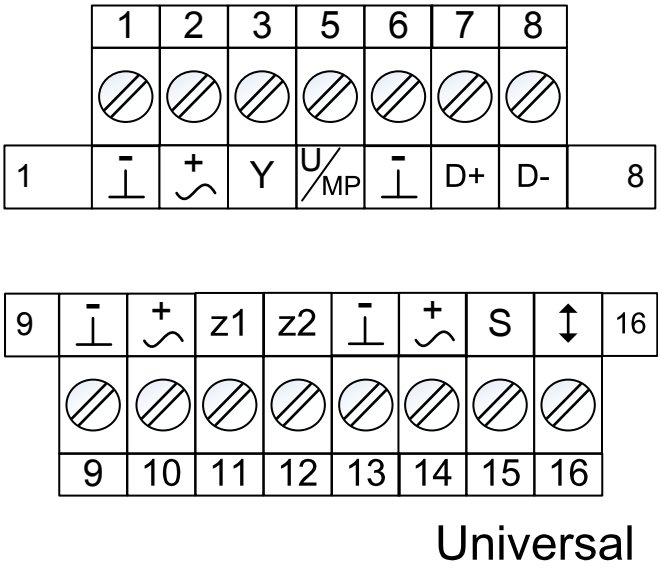

Nomenclature

1, 6, 9, 13: ⊥, – = Ground, neutral
2, 10, 14: ~, + = Supply voltage 24 V
3: Y = Setpoint signal Y and override controls
5: U/MP = Actual value signal or MP-Bus or service tool connection
7: D+ = B = C2 = RS-485 bus (BACnet MS/TP or Modbus RTU)
8: D- = A = C1 = RS-485 bus (BACnet MS/TP or Modbus RTU)
11, 12: z1, z2 = Forced control inputs
15: Extension for external sensor
16: Not used

Wiring diagram analogue control

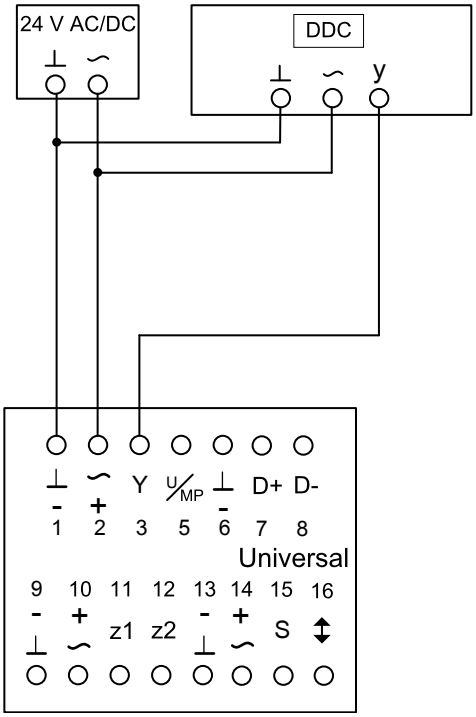

Nomenclature

1: ⊥, – = Ground, neutral
2: ~, + = Supply voltage 24 V AC/DC
3: Y = setpoint input and override control
5: U/MP = Actual value signal

Note:

- DDC = Setpoint value setting
- Setpoint value and actual value signals depend on the signal voltage range, either 0 – 10 V DC or 2 – 10 V DC

Wiring diagram Modbus, BACnet operation

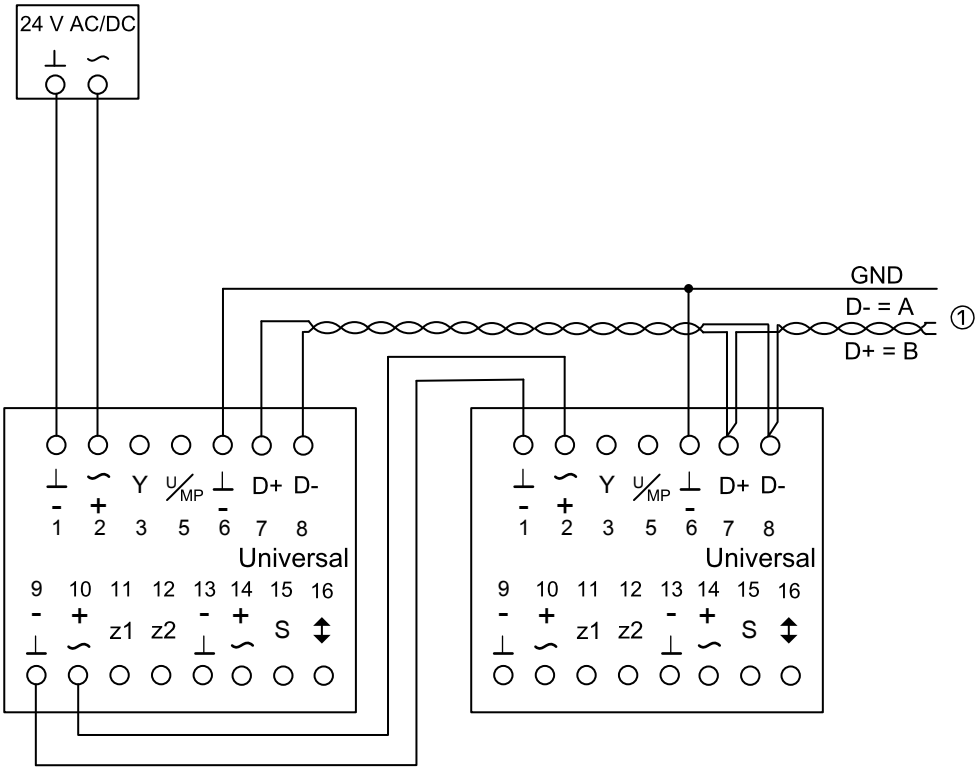

Nomenclature

1: ⊥, – = Ground, neutral
2: ~, + = Supply voltage 24 V AC/DC
6: GND = Common ground potential
7: D+ = Modbus/BACnet B, C2
8: D- = Modbus/BACnet A, C1

Note

- ① Additional network participants for Modbus/BACnet (maximum 32)
- Supply voltage and communication not galvanically isolated
- Voltage supply: Make sure that all devices on the bus have the same GND reference point
- Use terminal resistors on both ends of the bus. Bus terminating resistors integrated in the VRU can be activated with the service tool

MP-Bus connection diagram

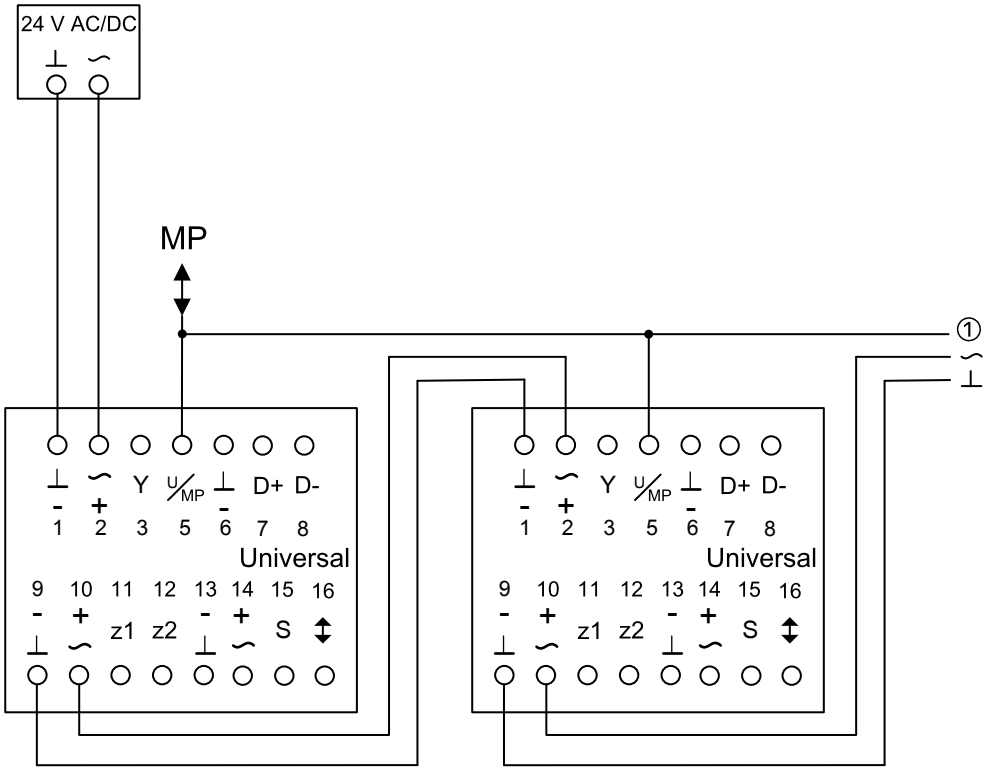

Nomenclature

1: ⊥, – = Ground, neutral
2: ~, + = Supply voltage 24 V AC/DC
5: U/MP = MP-Bus connection

Note

- ① Number of MP-Bus participants depends on the type of MP-Bus devices; maximum 16 participants
- Of which max. 8 MP participants (e.g. volume flow controller)
- Plus a maximum of 8 MPL participants (e.g. valve drives)
- Supply voltage and communication not galvanically isolated
- Voltage supply: Make sure that all devices on the bus have the same GND reference point.

Wiring diagram hybrid operation

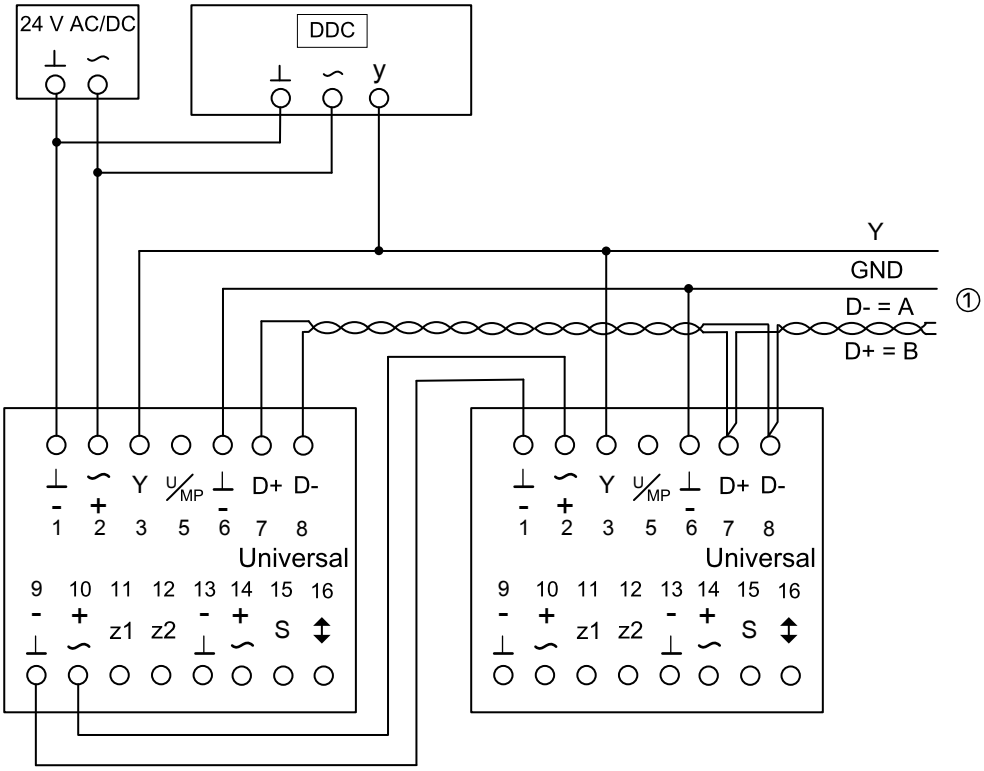

Nomenclature

1: ⊥, – = Ground, neutral
2: ~, + = Supply voltage 24 V AC/DC
6: GND = Common ground potential
7: D+ = Modbus/BACnet B, C2
8: D- = Modbus/BACnet A, C1

Notes

- DDC = setpoint setting Δp
- ① Additional network participants for Modbus/BACnet (maximum 32)
- Supply voltage and communication not galvanically isolated
- Voltage supply: Make sure that all devices on the bus have the same GND reference point
- Use bus terminating resistors at the ends of the bus line
- Bus terminating resistors integrated in the VRU can be activated with the service tool

Connection diagram for override controls, Alternative 1: Y-input

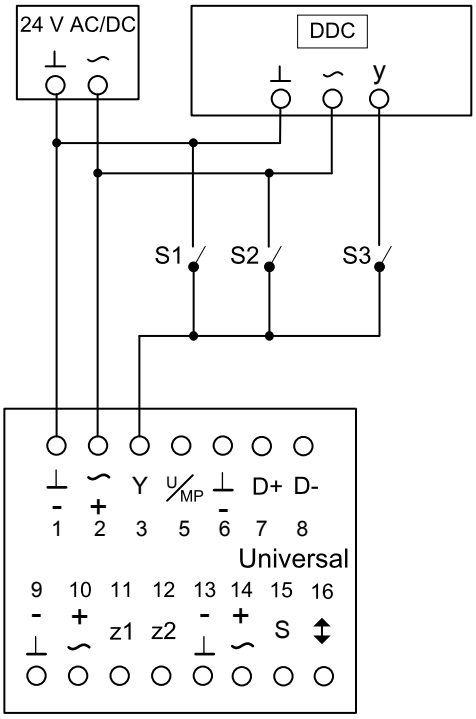

Nomenclature

1: ⊥, – = Ground, neutral
2: ~, + = Supply voltage 24 V AC/DC
3: Y = Setpoint signal and override controls
5: U/MP = Actual value signal or MP-Bus or service tool connection

Notes

- DDC = Setpoint for Δp
- When combining several override controls, the switches must be interlocked to prevent short-circuits
- Setpoint value and actual value signals depend on the signal voltage range, either 0 – 10 V DC or 2 – 10 V DC

Wiring variants Y-signal

Constant mode Δp_{min} (override control Δp_{min})

- Only switch (connection) S1 may be closed
- Only works with signal voltage range 0 - 10 V DC

Priority Δ_{pmax}

- Only S2 has to be closed

Control operation $\Delta_{pmin} – \Delta_{pmax}$

- Analogue setpoint for Δp
- Only S3 has to be closed

Override control, damper blade CLOSED

- Only S1 has to be closed
- Only works with signal voltage range 2 - 10 V DC

Connection diagram for override controls, Alternative 2: z1/z2 input

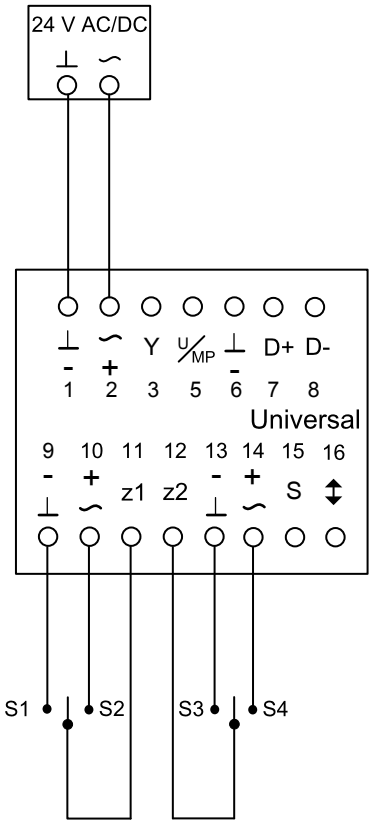

Nomenclature

9: ⊥, – = Ground, neutral
10: ~, + = Supply voltage 24 V AC/DC
11: Priority z1
12: Priority z2
13: ⊥, – = Ground, neutral
14: ~, + = Supply voltage 24 V AC/DC

Notes

- When combining several override controls, the switches must be interlocked to prevent short-circuits

Wiring variants z1/z2 input

Control stop (e.g. door contact)

- Only S1 has to be closed

Override control, damper blade OPEN

- Only S2 has to be closed

Override control, damper blade CLOSED

- Only S3 has to be closed

Priority Δ_{pmax}

- Only S4 has to be closed

Further override controls possible at the Y input.

Explanation

Δ_{pNom}[in. w.g.]
Nominal pressure (100 %): Maximum differential pressure that can be detected by the pressure transducer and converted into an electrical signal. Please note that the adjustable differential pressure range is only a range of the nominal pressure and cannot be fully utilised (see technical data). $\Delta p_{Nominal}$ is the reference value for defining Δp_{min} and Δp_{max}.

Δ_{pmax}[in. w.g.]
Upper limit of the operating range of the duct pressure controller adjustable by the customer (note usable control range, see technical data). In case of analogue signalling to duct pressure controllers (which are typically used), the maximum value of the setpoint signal (10 V) is assigned the set maximum value (Δp_{max}(see characteristic).

Δ_{pmin}[in. w.g.]
Customer-adjustable lower limit of the operating range of the duct pressure controller: Δp_{min} should be set to less than or equal to Δp_{max} . Δp_{min} should not be set lower than the lower control range, otherwise the control is unstable. With analogue control, the minimum value of the setpoint signal (0 or 2 V) is assigned the set minimum value Δp_{min} (see characteristic).

Δ_{p}[in. w.g.]
Differential pressure

Duct pressure controller
Consists of a basic unit and an attached control component for duct pressure control

Basic unit (for duct pressure controller)
Control unit without attached control component. The main components are the casing and the damper blade to control the differential pressure in the relevant section of the air duct.
Important distinguishing features:
Geometry or unit shape, material and types of connection, acoustic characteristics (e.g. acoustic cladding option or integral silencers).
For manufacturing reasons, the basic unit is based on the basic units for volume flow control and is therefore also referred to as a VAV terminal unit. Sensor elements of the VAV terminal unit are therefore usually present, but are not accessible in all construction variants, e.g. acoustic cladding.
The pressure measurement point is typically placed in the air duct downstream of the terminal unit.

Control component (for duct pressure controller)
Electronic unit(s) mounted on the basic unit to control the pressure in an air duct section (e.g. branch) by adjusting the control damper position.
The electronic unit essentially consists of a controller with differential pressure transducer (integral or external) and an actuator, which is an integral part of compact controllers and separately supplied for universal controllers, e.g. to define additional functions such as a safe position.
Important distinguishing features:

- Transducers: Measuring and control range
- Actuator variants VARYCONTROL universal controller:
  - Standard actuator, slow-running
  - Spring return actuator for damper blade safety function
- Actuator variants TROX UNIVERSAL:
  - Standard actuator, slow-running
  - Spring return actuator for damper blade safety function
  - Fast-running actuator
- Interface technology:
  Analogue interface or digital bus interface for the capturing and transmission of signals and information only with TROX UNIVERSAL: various expansion modules can be used, e.g. for simultaneous volume flow rate measurement.