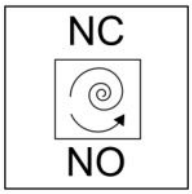

Safe position - spring return

Control component

BUDNF

Control component with dynamic transducer and separate spring return actuator for VAV terminal units

Universal device for use with VAV terminal units

- Controller and dynamic differential pressure transducer in one casing
- Separate actuator with spring return for safe positions
- Use in ventilation and air conditioning systems, only with clean air
- Suitable for constant and variable volume flow rates
- Activation of override controls via external wiring
- Volume flow rates q_{vmin} and q_{vmax} are parameterised in the factory and saved in the controller
- Modification of operating parameters by PC software as well as smartphone and tablet app (TROX FlowCheck app)
- Service access for PC configuration software
- Smartphone access via NFC interface and Bluetooth
- Setpoint value settings, override controls and parameter adjustment via analogue interface or bus communication
- High data transparency through standardised bus communication MP-Bus, Modbus RTU or BACnet MS/TP

General information	2	Variants	7
Function	4	Technical data	8
Specification text	5	Product details	25
Order code	6	Explanation	36

General information

Application

- All-in-one control engineering device for VAV terminal units
- Dynamic differential pressure transducer and control electronics in one casing
- Separate actuator with spring return
- Safe position can be defined upon failure of the supply voltage or wire breakage in the order code: NC = damper closed, NO = damper in OPEN position
- For use only with clean air
- Standard filtration in comfort conditioning systems allows for using the controller in the supply air without additional dust protection.
- Choice of various control options based on setpoint value default setting
- Volume flow rate control is based on setpoint values received from room temperature controller, central BMS, air quality controller or other devices as an analogue signal or via communication interface
- Override controls for activating q_{vmin}, q_{vmax}, shut-off, OPEN position via MP-Bus data points or Modbus/BACnet register or switch/relay possible
- The volume flow rate actual value is available as a network data point or as a linear voltage signal
- The damper blade position is available as a network data point
- Use the TROX FlowCheck app and PC tool to configure the controller and the communication parameters

With heavy dust levels in the room

- Install suitable extract air filters upstream, as a partial volume flow is routed through the transducer for volume flow rate measurement

If the air is additionally contaminated, e.g. with fluff or sticky particles

- Use of the BUSNF attachment group instead of the BUDNF universal controller described here

Control strategy

- The volume flow controller works independent of the duct pressure
- Differential pressure fluctuations do not result in permanent volume flow rate changes
- To prevent the control from becoming unstable, a dead band is allowed within which the damper blade does not move
- The flow rate range for the controller is set in the factory
  - q_{vmin}: minimum volume flow rate
  - q_{vmax}: maximum volume flow rate
- Operating parameters are set in the factory according to the order code

Interface

Analogue interface

- Analogue interface with adjustable signal voltage range
- Analogue signal for volume flow rate setpoint
- Analogue signal for volume flow rate actual value

Digital communication interface (bus)

- MP bus
- Modbus RTU, RS-485
- BACnet MS/TP, RS-485
- Data points, see bus lists

Hybrid mode

- Mixed mode of analogue and digital interface

Factory setting

- Setpoint value default setting via analogue interface
- Actual value output via analogue interface and Modbus communication interface

Operating modes

Variable operation (V)

- Setpoint value setting via analogue signal, Modbus, BACnet or MP-Bus: operating range corresponds to q_{vmin} – q_{vmax}

Constant value mode (F)

- A setpoint signal is not required, setpoint value corresponds to q_{vmin}

Operating parameters

- The flow rate range for the controller is set in the factory
  - q_{vmin}: minimum volume flow rate
  - q_{vmax}: maximum volume flow rate
- q_{vmin} = 0 – 100 % of the nominal volume flow rate q_{vNom} adjustable
- q_{vmax} = 20 – 100 % of the nominal volume flow rate q_{vNom} adjustable

Signal voltage ranges

- 0 – 10 V DC
- 2 – 10 V DC

Parts and characteristics

- Transducer for dynamic measurement principle
- Separate actuator with simple connection plug
- Plug-in terminals for power and bus cables, with cover
- Socket for the actuator
- NFC and service interfaces
- Crank handle for manual winding of the spring return actuator
- Release button to allow for manual operation
- Indicator lights for displaying the operating mode
- Addressing button to confirm the addressing request of an MP master (only in MP-Bus mode)
- Controller casing prepared with 4 openings for cable glands; 2 cable glands M16 x 1.5 for connecting cable are part of the supply package

Construction

BUDNF with actuator LF24-VST for:

- TVR, TVZ, TVA up to NW 10

BUDNF with actuator NF24A-VST for:

- TVJ, TZ-Silenzio, TA-Silenzio all dimensions
- TVR, TVZ, TVA, for NW 12 – 16
- TVT up to dimension 39.37 x 11.81 or 31.5 × 15.75

Commissioning

- Due to the volume flow rates set in the factory, always ensure that the control units are only installed in the specified locations
- Modbus/BACnet/MP bus interface: additional commissioning steps required
- Operating parameters can be adjusted using the TROX FlowCheck app

Useful additions

- TROX FlowCheck app for Android and iOS
- Bluetooth-to-NFC converter ZIP-BT-NFC
- Type ZTH-EU adjustment device (limited use)
- Belimo PC-Tool software
- X-AIRCONTROL zone modules for room control

Function

A closed control circuit for regulation of the volume flow rate, i.e. measuring - comparing - adjusting, is characteristic of air terminal units.
The volume flow rate is recorded by measuring a differential pressure (effective pressure). This is done via a differential pressure sensor. An integrated differential pressure transducer converts the effective pressure into a voltage signal. The volume flow rate actual value is available as a voltage signal. The factory setting is such that an actual output signal of 10 V DC always corresponds to the nominal volume flow rate (q_{vnom}).
The volume flow rate setpoint value is specified by a higher-level controller (e.g. room temperature controller, air quality controller, central BMS). Variable volume flow control results in a value between q_{vmin} and q_{vmax}. It is possible to override the room temperature control by override controls, e.g. by a complete shut-off of the duct.
The controller compares the volume flow rate setpoint value to the actual value and controls the external actuator accordingly to the system deviation. If the supply voltage is interrupted or the wire breaks, the spring return actuator moves to the fail-safe position OPEN (NO) or CLOSED (NC) as specified in the order code.

Principle of operation Universal controller: TVR, TVJ, TVT, TZ-/TA-Silenzio, TVZ, TVA, TVRK

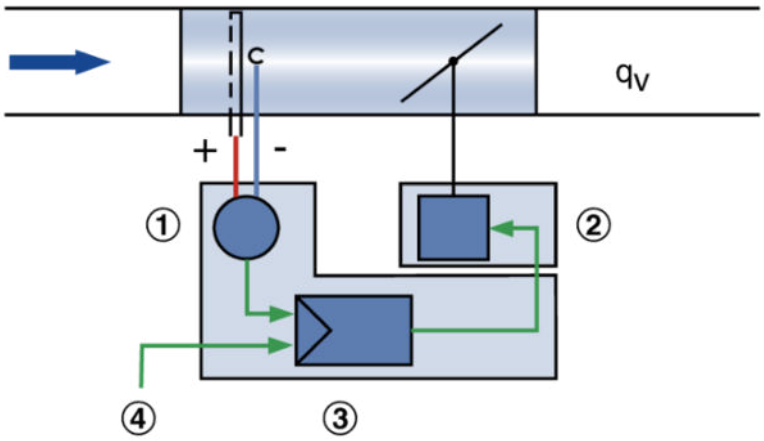

① Differential pressure transducer
② Actuator
③ Volume flow controller
④ Setpoint value signal

Specification text

This specification text describes the general properties of the product.

Category
- Universal controller for volume flow rate with safe position

Application
- Control of a constant or variable volume flow rate setpoint
- Electronic controller for connecting a controlled variable and tapping an actual value signal
- The actual value signal relates to the nominal volume flow rate such that commissioning and subsequent adjustment are simplified
- Stand-alone operation or integration in central building management system

Area of application
- Differential pressure transducer with dynamic measuring principle for clean air in ventilation and air conditioning systems

Actuator
- Spring return actuator for defined safe position of the damper blade in case of power failure. Run time 120 s for 90°; run time spring return < 20 s for 90°

Installation orientation
- either direction

Connection
- Pluggable connection terminals; no additional terminal box required

Supply voltage
- 24 V AC/DC

Interface/signalling
Analogue signal
- 0 – 10 V DC or 2 – 10 V DC

Bus interface
- MP bus
- Modbus RTU
- BACnet MS/TP

Interface information
Analogue:
- Volume flow rate setpoint and actual value

Bus interface:
- Volume flow rate setpoint and actual value
- Damper blade position
- Fault status

System connections
MP-Bus for optional extensions
- Suitable for TROX X-AIRCONTROL zone module X-AIR-ZMO-MP
- Gateways for Modbus, BACnet, KNX, e.g. Belimo UK24EIB
- Fan optimiser, e.g. Belimo COU24-A-MP

Modbus RTU for optional extensions
- Suitable for TROX X-AIRCONTROL zone module X-AIR-ZMO-MOD, e.g. in conjunction with X-SENS-SPLITTER

Special functions
- Activation q_{vmin}, q_{vmax}, Closed, Open, Control Stop by means of external switching contacts/wiring or bus communication

Parameter setting
Parameters specific to VAV terminal unit parameterised at the factory
- Operating values q_{vmin}, q_{vmax} factory parameterised
- Signal characteristic factory parameterised

Subsequent adjustment
- Via TROX FlowCheck app (NFC or Bluetooth with optional adapter)
- Via PC software

Factory condition
- Electronic controller factory-mounted on the terminal unit
- Factory parameter settings
- Functional test under air; certified with sticker

Order code

Control component BUDNF (shown together with TVR as an example)

TVR – D – P1 – / 8 / D2 / BUDNF / V 0 / 294.3 – 706.32 [cfm] / NO
1 2 3 4 5 6 7 9 10 11 12

1 Type
TVR VAV terminal unit

2 Acoustic cladding
No entry: none
D With acoustic cladding

3 Material
No entry: galvanised sheet steel
P1 Powder-coated RAL 7001 (silver grey)
A2 Stainless steel construction

4 Duct connection
No entry: push-fit, suitable for ducts according to EN 1506; with groove for optional lip seal
FL Flanges both ends (not for TVR-D-P1)

5 Nominal size [in.]
4, 5, 6, 8, 10, 12, 16

6 Accessories
No entry: without accessories
D2 Double lip seal both ends (push-fit only)
G2 Matching flanges for both ends (only with FL)

7 Attachments (control component)
BUDNF Universal volume flow rate controller with dynamic transducer and separate spring return actuator

9 Operating mode
F Constant value mode (one setpoint value, no external switch contact)
V Variable operation (adjustable setpoint value range)

10 Signal voltage range
For the actual and setpoint value signals
0 0 – 10 V DC
2 2 – 10 V DC

11 Operating values for factory setting
Volume flow rate [cfm]

Depending on operating mode
F: q_{vconst}
V: q_{vmin} – q_{vmax}

12 Damper blade position
NO Power off to open (Normally Open)
NC Power off to close (Normally Closed)

Order example: TVR-D-P1/8/D2/BUDNF/V0/294.3-706.32[cfm]/NO

Type	TVR
Acoustic cladding	With acoustic cladding
Material	Powder-coated RAL 7001 (silver grey)
Duct connection	Push-fit, suitable for ducts according to EN 1506; with groove for optional lip seal
Nominal size [in]	8
Accessories	Double lip seal both ends
Attachments (control component)	BUDNF – Universal controller with dynamic transducer and separate spring return actuator
Operating mode	Variable operation
Signal voltage range	2 – 10 V DC
Operating values for factory setting	294.3 – 706.32 [cfm]
Damper blade position	Power off to open (Normally Open)

Variants

Universal controller, type VRU-D3-M/B TR

① Adaptation key
② Actuator connection socket
③ NFC interface
④ Dummy cover (not in use)
⑤ Cable glands (separate supply and control)
⑥ Fixing holes
⑦ Connection for effective pressure sensor

Universal controller, type VRU-***-M/B TR (terminal cover opened)

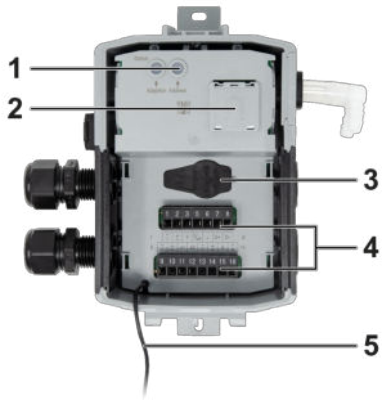

① Yellow status LED; address confirmation (only with MP-Bus operation)
② Magnetic holder for ZIP-BT-NFC
③ Service socket
④ Pluggable terminal strips
⑤ Cover fixing (safety cable)

Actuator with spring return LF24-VST TR

① Axle support
② Actuator total
③ Plug connection for the controller
④ Mechanical end stop for rotation angle
⑤ Direction of rotation of spring return (clockwise here)
⑥ Holder for crank handle for manual winding (locking via abrupt change of direction of rotation)
⑦ Connecting cable

Actuator with spring return NF24A-VST TR

① Axle support
② Actuator total
③ Position lock spring return (e.g. after manual winding using crank handle)
④ Socket for the crank handle
⑤ Connecting cable
⑥ Plug connection for the controller
⑦ No function
⑧ Mechanical end stop for rotation angle

Technical data

Universal controller for VAV terminal units

–	Controller		Actuator		–
Order code detail	**Part number**	**Type**	**Part number**	**Type**	**VAV terminal units**
BUDNF	A00000073650	VRU-D3-M/B TR	A00000076097	LF24-VST TR	②
BUDNF	A00000073650	VRU-D3-M/B TR	A00000073648	NF24A-VST TR	①

①
TVR, TVZ, TVA up to NW 10
②
TVR, TVZ, TVA from NW 12
TVJ
TVT up to dimension 39.37 × 11.81 or 31.5 × 15.75

Universal controller VRU-D3-M/B TR

Universal controller VRU-D3-M/B TR

Type of measurement/installation orientation	dynamic measuring principle, position-independent
Nominal voltage	AC/DC 24 V
Rated voltage frequency	50/60 Hz
Functional range	19.2 - 28.8 V AC or 21.6 - 28.8 V DC
Power consumption (when running/when idle)	1.5 W
Power requirement dimensioning	2 VA plus connected VST drive
Power consumption dimensioning note	I_{max} 20 A @ 5 ms
Drive connection	AC/DC supply through controller, PP-Link VST drive
Bus connection	**Modbus RTU*,** BACnet MS/TP, MP-Bus
Modbus RTU communication parameters to be set	Baud rate: 9600, 19200, **38400***, 76800, 115200; Address: **1***,2.3 – 247; Parity: **1-8-N-2***, 1-8-N-1, 1-8-E-1, 1-8-O-1; Number of nodes: maximum 32 (without repeater) Terminal resistor: 120 Ω, integral, can be activated
BACnet MS/TP communication parameters to be set	Baud rate: 9600, 19200, **38400***, 76800, 115200; Address: **1***,2.3 – 127; Number of nodes: maximum 32 (without repeater) Terminal resistor: 120 Ω, integral, can be activated
Addressing	Required on site: through TROX FlowCheck App
Setpoint value signal input (analogue optional)	0 - 10 V DC, 2 - 10 V DC Input resistance 100 kΩ
Actual value signal output	0 - 10 V, 2 - 10 V, maximum 0.5 mA
Protection class IEC/EN	III (Protective extra-low voltage)
Protection level	IP 42
Weight	0.66 lbs
EMC	CE according to 2014/30/EU

* Factory setting

Actuator with spring return LF24A-VST TR

Actuator with spring return LF24A-VST TR

Power supply	from the controller
Power consumption – when running	2.5 W
Power requirement dimensioning	5 VA
Self-consumption (idle state)	1 W
Torque	4 Nm
Run time for 90°	120 s/90°
Running time emergency control function	< 20 s/90°
Setpoint value signal input	from the controller
IEC protection class	III (Protective extra-low voltage)
Protection level	IP 54
EMC	EMC to 2014/30/EU
Weight	3.97 lbs
Manual adjustment	by hand crank; locking by counter-rotation

Actuator with spring return NF24A-VST TR

Actuator with spring return NF24A-VST TR

Power supply	from the controller
Power consumption – when running	5 W
Power requirement dimensioning	8 VA
Self-consumption (idle state)	2.5 W
Torque	10 Nm
Run time for 90°	120 s/90°
Running time emergency control function	< 20 s/90°
Setpoint value signal input	from the controller
IEC protection class	III (Protective extra-low voltage)
Protection level	IP 54
EMC	EMC to 2014/30/EU
Weight	5.07 lb
Manual adjustment	by hand crank and locking switch

Meaning of the green status LED/push button (applies to all VRU control components)

LED/push button (green)	Meaning
ON	Power supply ok - Normal operation
blinking	in operation - status message pending*
at the press of the button	Trigger rotation angle adaptation, then normal operation

*** Status message pending:** signals a pending status message, whereby the type of fault is not specified. For a concrete evaluation of this collective fault message, a query must be made using service tools or the bus interface:

- Belimo Assistant app, TROX FlowCheck app or Belimo PC-Tool software
- MP-Bus command, Modbus register, BACnet object

Meaning of the yellow status LED/push button (applies to all VRU control components)

LED/push button (yellow)	Meaning
blinking	MP-Addressing
at the press of the button	Confirmation of addressing

Commissioning

- As the volume flow rates are factory set, the terminal units have to be installed at the specified locations
- After installation and wiring, the controller is ready for operation via the analogue interface
- Comply with the volume flow rate control ranges of the VAV terminal units; do not set a volume flow rate lower than the minimum flow rate
- Only briefly remove the protective cap of the control component during wiring

For bus operation, further commissioning steps are required depending on the required integration of the control component into the local network:

For operation with Modbus interface

- Switching the setpoint to bus with the service tool
- Bus protocol is already set in the factory from Modbus RTU; no adjustment required
- Adjust Modbus participant address and communication settings

For operation with BACnet interface

- Switching the setpoint to bus with the service tool
- Switch bus protocol to BACnet MS/TP with service tool
- Adjust BACnet subscriber address and communication settings

For operation with MP-Bus interface

- Switching the setpoint to bus with the service tool
- Switch bus protocol to MP-Bus with service tool
- Adjusting the MP-Bus subscriber address and communication settings
- For operation with MP-Bus interface in existing systems as a replacement for VRP-M controllers: Activation of VRP-M compatibility mode required

Functional scope of service tools

Function/parameter setting	TROX FlowCheck app	PC-Tool [1]	ZTH-EU
Setting of q_{vmin}, q_{vmax}	R, W [2]	R, W	R, W
Signal voltage range setting 0 – 10 V or 2 – 10 V DC for analogue interface	R, W [2]	R, W	–
Setpoint value default setting via analogue connection or bus (Modbus, BACnet or MP bus)	R, W [2]	R, W	–
Modbus, BACnet settings (address, communication parameters)	R, W [2]	R, W	–
MP-Bus settings (address)	R, W [2]	R, W	–
Execute override controls (test function)	yes [3]	yes	–
Trend display	yes [3]	yes	–

R, W = function is readable and writable
- = Function is not available for the service tool

[1] Requires interface converter, e.g. setting devices ZTH-EU
[2] Function/parameterisation is possible without connecting the controller to supply voltage
[3] Function/parameterisation only in conjunction with ZIP-BT-NFC **and** connected power supply to the controller

For the proper use of the service tools, they should always be kept up to date with the latest software version.
Information on current versions/updates for PC-Tool software and setting device ZTH-EU on the Belimo homepage www.belimo.com.
Minimum versions for ZTH-EU firmware: V 2.09.0004

Modbus RTU communication interface

Number	Register Address	Description	Range Enumeration	Unit	Scaling	Access
1	0	Setpoint value between $q_{vmin}/\Delta p_{min}$ (reg. address 105) and $q_{vmax}/\Delta p_{max}$ (reg. address 106) (*1) (*2) (*3) (*4)	0 – 10,000 Factory setting: 0	%	0.01	[R / W]
2	1	Override control Overwrites the setpoint value with override control	0: None 1: OPEN 2: CLOSED 3: $q_{vmin}/\Delta p_{min}$ 5: $q_{vmax}/\Delta p_{max}$ Factory setting: None	–	–	[R / W]
3	2	Command triggering Triggering of functions for service and test purposes. Command ends automatically with 0	0: None 1: Adapting 3: Synchronisation Factory setting: None	–	–	[R / W]
4	3	Type of actuator (*5)	0: Actuator not connected/not known 1: Actuator Air/Water with/without safety function 2: Volume flow controller VAV/EPIV 3: Fire damper 4: Energy Valve 5: 6way EPIV	–	–	[R]
5	4	Current damper blade position acc. to mechanical limits (*5)	0 – 10,000	%	0.01	[R]
6	5	Blade angle acc. to angle range (*5)	0 – 9,600	°	0.01	[R]
7	6	Relative volume flow rate related to q_{vnom} (reg. address 110) (*6)	0 – 15,000	%	0.01	[R]
8	7	Absolute volume flow rate (*6)	0 – q_{vnom}	cfm	1	[R]
9	8	Sensor value (voltage, resistance, switch) Value dependent on the setting of the sensor type (reg. address 107)	0 – 65,535	mV, Ω, 0/1	0.1	[R]
10	9	–	–	–	-	[–]
11	10	Absolute volume flow rate in selected volume flow unit acc. to (reg. address 117) (Low word) < 16 of 32 bit (*6)	0 – 500,000,000	UnitSel	0.001	[R]
12	11	Absolute volume flow rate in selected volume flow unit acc. to (reg. address 117) (High word) > 16 of 32 bit (*6)	0 – 500,000,000	UnitSel	0.001	[R]
13	12	Analogue setpoint value	0 – 10,000	%	0.01	[R]

Number	Register Address	Description	Range Enumeration	Unit	Scaling	Access
		Shows the setpoint value in % with analogue control input signal. Active if reg. address 118 = 0 (analogue)				
51		Relative differential pressure According to application case as per (reg. address 128)	0 – 20,000	%	0.01	[R]
52		Absolute differential pressure	-4.01 – 60.22	in. w.g.	0.1	[R]
53		–	–	–	–	[–]
54		Absolute differential pressure in selected unit (reg. address 145) (Low word) < 16 of 32 bit	-10,000,000 – 100,000,000	UnitSel	0.001	[R]
55		Absolute differential pressure in selected unit as per (reg. address 145) (High word) > 16 of 32 bit	-10,000,000 – 100,000,000	UnitSel	0.001	[R]
100	99	Bus terminal resistor Indicates whether the terminal resistor (120 Ω) is active or deactivated. Can only be set using service tools.	0: Not active 1: Active Factory setting: Not active	–	–	[R]
101	100	Serial number, part 1 Example: 00839-31324-064-008 1st part: 00839 2st part: 31324 3st part: 008	–	–	–	[R]
102	101	Serial number, part 2	–	–	–	[R]
103	102	Serial number, part 3	–	–	–	[R]
104	103	Firmware version Example: 101, version 01.01.	–	–	–	[R]
105	104	Malfunctions and service information – automatic reset if status has ceased	Bit 0: – Bit 1: Mechanical travel too high Bit2: Actuator cannot be moved (e.g. mechanical overload) Bit 3: – Bit 4: Error of dP sensor Bit 5: Return air flow detected Bit 6: Volume flow rate too low Bit 7: Flow rate in closed position Bit 8: Internal activity (e.g. test run, adaptation) Bit9: Gear release active Bit10: Bus monitoring triggered Bit 11: Actuator not suitable for application Bit 12: Pressure sensor incorrectly connected Bit 13: Pressure sensor not reached Bit 14: Error in dP sensor outside of measuring range	–	–	[R]
106	105	Setting work areas $q_{vmin}/\Delta p_{min}$ Requirements: $q_{vmin}/\Delta p_{min} < q_{vmax}/\Delta p_{max}$ Vmax in the area 0 – 100 % of $q_{vnom}/\Delta p_{nominal}$	0 – $q_{vmax}/\Delta p_{max}$	%	0.01	[R / W*]
107	106	Setting work areas $q_{vmax}/\Delta p_{max}$ Requirements: $q_{vmax}/\Delta p_{max} < q_{vmin}/\Delta p_{min}$	2,000–10,000	%	0.01	[R / W*]

Number	Register Address	Description	Range Enumeration	Unit	Scaling	Access
		Vmax in the area 20 – 100 % of q_{vnom}/ $\Delta p_{nominal}$				
108	107	Type of sensor If reg. address 118 = 0 (analogue), then reg. address 107 = 1 (active) for mV	0: None 1: Active 2: Passive 3: – 4: Switch Factory setting: None	–	–	[R / W*]
109	108	Bus timeout monitoring If there is a bus timeout, the actuator moves into a position specified here. The position is mech. limited, q_{vmin}/ Δp_{min} and q_{vmax}/Δp_{max} have no impact. Release if no change takes place in reg. address 1 or reg. address 2 in the specified time for reg. address 109. Display of release in reg. address 104. In hybrid mode, bus timeout activation is deactivated. Bus timeout time: acc. to reg. address 109	0 – 10,000 Factory setting: 0	%	0.01	[R / W*]
110	109	Time until release bus timeout monitoring If reg. 108 ≠ 0, then the initial automatic status is reg. 108 = 120 s.	0 – 3,600 0: Inactive Factory setting: Deactivated	s	1	[R / W*]
113	112	Nominal volume flow rate in selected volume flow unit acc. (reg. address 117) (Low word) < 16 of 32 bit	0 – 60,000,000	UnitSel	0.001	[R]
114	113	Nominal volume flow rate in selected volume flow unit acc. (reg. address 117) (High word) > 16 of 32 bit	0 – 60,000,000	UnitSel	0.001	[R]
115	114	–	–	–	–	[–]
116	115	–	–	–	–	[–]
117	116	Control mode	0: Position control (open loop) 1: Volume flow control Factory setting: Volume flow control	–	–	[R]
118	117	Unit selection – Unit selection for reg. address 11 and 12	0: – 1: m³/h 2: l/s 3: – 4: – 5: – 6: cfm	-	–	[R / W*]
119	118	Setpoint value setting If reg. address 118 = 0 (analogue), then reg. address 12 = active. If reg. address 118 = 1 (Bus), then reg. address 1 = active.	0: Analogue (0 – 10 V, 2 – 10 V) 1: Bus (Modbus, BACnet, MP-Bus) Factory setting: Analogue	–	–	[R / W*]

Number	Register Address	Description	Range Enumeration	Unit	Scaling	Access
120		Pressure operating mode Only for VRU-M1R-M/B TR.	0: Negative pressure 1: Positive pressure	–	–	[R / W*]
121		–	–	–	–	[–]
122		–	–	–	–	[–]
123		–	–	–	–	[–]
124		Room pressure cascade release Only available if reg. address 124 = 0 (volume flow control) or 2 (room pressure control).	0: Inactive 1: Active 2: Active fast (only for VRU-M1R-M/B TR)	–	–	[R]
125		Applications	0: Volume flow control 1: Pressure control 2: Room pressure control 3: Flow measurement	–	–	[R]
126		Unit height	0 – 9,842.52 Factory setting: 0	ft	1	[R / W*]
127		Nominal differential pressure in the selected unit as per (reg. address 145) More info in (reg. address 128)	D3: 0 – 50000 M1: 0 – 60000 M1R: 0 – 60000	UnitSel	–	[R]
128		–	–	–	–	[–]
129		Nominal differential pressure in in. w.g. If reg. address 124 = 0 (volume flow control), then reg. address 110 as q_{vnom}. If reg. address 124 = 1 (differential pressure control) or 2 (room pressure control), then the maximum is defined by the diff. pressure.	D3: 0 – 2 M1: 0 – 2 M1R: 0 – 3	in. w.g.	0.1	[R]
146		Selection of the pressure unit The selected unit is displayed in (reg. address 126).	0: Inches of Water Gauge 1: – 2: Water column Factory setting: Inches of Water Gauge	–	–	[R / W*]

[R] = Read-only access to register
[R/W] = Register readable and writable
[R/W*] = Register readable and writeable with restrictions; all writeable registers from 100 are persistent (stored in the EEPROM), regular or cyclical writing must be avoided.

(*1) If reg. addr. 118 = 1 (bus), then reg. addr. 0 = active
(*2) If reg. addr. 124 = 0 (flow rate control), then reg. addr. 0 = flow rate
(*3) If reg. addr. 124 = 0 (volume flow control) and reg. addr. 116 = 0 (position control), then reg. addr. = damper blade position
(*4) If reg. addr. 124 = 1 (differential pressure control) or 2 (room pressure control), then reg. addr. = pressure
(*5) If reg. addr. 124 = 2 (room pressure control) or 3 (volume flow measurement), then reg. addr. = deactivate 65.535
(*6) If reg. addr. 124 = 1 (differential pressure control) or 2 (room pressure control), then reg. addr. = deactivate 65.535

BACnet MS/TP - Protocol Implementation Conformance Statement - PICS (General information)

Date	2020-06-11
Vendor Name	TROX GmbH
Vendor ID	329
Product Name	VRU-D3-BAC, VRU-M1-BAC, VRU-M1R-BAC
Product Model Number	VRU - BAC
Applications Software Version	01.02.0001
Firmware revision	10.02.0000
BACnet Protocol Revision	12
Product Description	Controller for VAV/CAV and pressure applications
BACnet Standard Device Profile	BACnet Application Specific Controller (B-ASC)
BACnet Interoperability Building Blocks supported	Data Sharing – ReadProperty-B (DS-RP-B) Data Sharing – ReadPropertyMultiple-B (DS-RPM-B) Data Sharing – WriteProperty-B (DS-WP-B) Data Sharing – WritePropertyMultiple-B (DS-WPM-B) Data Sharing – COV-B (DS-COV-B) Device Management – DynamicDeviceBinding-B (DM-DDB-B) Device Management – DynamicObjectBinding-B (DM-DOB-B) Device Management – DeviceCommunicationControl-B (DM-DCC-B)
Segmentation Capability	No
Data Link Layer Options	MS/TP master, baud rates: 9600, 19200, 38400, 76800, 115200
Device Address Binding	No static device binding supported
Networking Options	None
Character Sets Supported	ISO 10646 (UTF-8)
Gateway Options	None
Network Security Options	Non-secure device

Communication interface BACnet MS/TP - Object processing

Object type	Optional properties	Writeable properties
Analog Input [AI]	Description COV Increment	COV Increment
Analog Output [AO]	Description COV Increment	Present Value COV Increment Relinquish Default
Analog Value [AV]	Description COV Increment	Present Value COV Increment
Binary Input [BI]	Description Active Text Inactive Text	
Device	Description Location Active COV Subscriptions Max Master Max Info Frames Profile Name	Object identifier Object Name Location Description APDU Timeout (1000 – 60000) Number Of APDU Retries (0 – 10) Max Master (1 – 127) Max Info Frames (1 – 255)
Multi-state Input [MI]	Description State Text	
Multi-state Output [MO]	Description State Text	Present Value Relinquish Default
Multi-state Value [MV]	Description State Text	Present Value (if marked)

Editing of services

- The unit does not support the services "Create object" and "Delete object".
- The specified maximum length of writable strings is based on single-byte characters.

1. Object name 32 characters
2. Location 64 characters
3. Description 64 characters

- The unit supports DeviceCommunicationControl services, no password required.
- A maximum of 6 active COV subscriptions with a runtime of 1 - 28800 s (maximum 8 h) are supported.

Communication interface BACnet MS/TP - BACnet objects

Object Name	Object Type	Description	Values	COV Increment	Access
Device	Device [Inst.No]		0 – 4,194,302 Factory setting: 1	–	WR
RelPos	AI[1]	Damper blade position in % Status flags: (*1), (*2)	0 – 100	0.01 – 100 Factory setting: 1	RD
AbsPos	AI[2]	Absolute position in ° Angular position corresponding to the entire rotation range. Status flags: (*1), (*2)	0 – max. angle	0.01 – 90 Factory setting: 1	RD
SpAnalogue	AI[6]	Analogue setpoint value in % Shows the analogue setpoint value according to the selected application flow rate, pressure, damper blade position as per ApplicationSel MV[2]. If setpoint value setting in SpSource MV[122] = 1 (analogue), then SpAnalog AI[6] = active. The analogue setpoint value is limited by Min AV[97] and Max AV[98]. Status flags: (*1), (*3)	0 – 100	0.01 – 100 Factory setting: 1	RD
RelDeltaP	AI[9]	Relative differential pressure in % with respect to DeltaPnom_in.w.g. AV[122]	0 – 150	0.01 – 150 Factory setting: 1	RD
RelFlow	AI[10]	Relative volume flow rate in % related to Vnom_m3h AV[112] Status flags: (*4)	0 – 150	0.01 – 150 Factory setting: 1	RD
AbsFlow_cfm	AI[12]	Absolute volume flow rate in cfm Status flags: (*4	0 – 35,314.62	1 – 35,314.62 Factory setting: 10	RD
DeltaP_UnitSel	AI[18]	Absolute differential pressure in selected unit as per UnitSelPressure MV[127]	-10,000 – 100,000	0.001 – 100,000 Factory setting: 1	RD
AbsFlow_UnitSel	AI[19]	Absolute volume flow rate in selected unit as per UnitSelAirFlow MV[121] Status flags: (*4)	0 – 500,000	0.01 – 500,000 Factory setting: 1	RD
Sens1Analogue	AI[20]	Sensor 1 as analogue value If Sensor1Type MV[220] = 2 (active), then display = analogue value in 0 – 10 V. If Sensor1Type MV[220] = 3 (passive), then display = resistance value. If RmPCascade MV[10] = 2 (enabled) or 3 (quickly enabled), then the sensor input is not	0 – 65535	0.01 – 1000 Factory setting: 1	RD

Object Name	Object Type	Description	Values	COV Increment	Access
		available. Status flags: (*5)			
DeltaP_in. w.g.	AI[29]	Absolute differential pressure in in. w.g.	0 – 2.41	0.01 – 2.41 Factory setting: 10	RD
SpRel	AO[1]	Relative setpoint value in % The rel. setpoint value depends on the application (flow rate/pressure/ damper blade position). If SpSource MV[122] = 2 (bus), then SpRel AO[1] = active. The analogue setpoint value is limited by Min AV[97] and Max AV[98]. Status flags: (*1), (*2)	0 – 100 Factory setting: 0	0.01 – 100 Factory setting: 1	C
Min	AV[97]	Minimum setpoint value in % (q_{vmin}/ P_{min}) Requirement: $q_{vmin}/\Delta p_{min} < q_{vmax}/\Delta p_{max}$ $q_{vmin}/\Delta p_{min}$ in the range 0 - 100 & $q_{vnom}/\Delta p_{nom}$	0 – $q_{vmax}/\Delta p_{max}$	0.01 – 100 Factory setting: 1	WR
Max	AV[98]	Maximum setpoint value in % (q_{vmax}/ P_{max}) Requirement: $q_{vmax}/\Delta p_{max} > q_{vmin}/\Delta p_{min}$ q_{vmax}/P_{max} in the range 20 - 100 % of q_{vnom}/P_{nom}	$q_{vmin}/\Delta p$ – 100	0.01 – 100 Factory setting: 1	WR
Vnom_cfm	AV[112]	Nominal volume flow rate in cfm	0 – 29,428.85	0.01 – 29,428.85 Factory setting: 1	RD
Vnom_UnitSel	AV[119]	Nominal volume flow rate in selected unit as per UnitSel MV[121]	0 – 250,000	0.01 – 1,000: Factory setting: 1	RD
SystemAltitude	AV[120]	System altitude in feet above sea level	0 – 9,842.52	1 – 9,842.52 Factory setting: 10	WR
DeltaPnom_in.w.g.	AV[122]	Nominal differential pressure in in. w.g. The nominal differential pressure depends on the selected pressure sensor (D3, M1, M1R). Depending on the selected application, the nominal differential pressure serves as dp@Vnom or as the maximum pressure limitation If ApplicationSel MV[2] = 1 (flow control), then display = nominal differential pressure If ApplicationSel MV[2] = 2 (pressure control) or 3 (room pressure control), then display = max. pressure limitation	D3: 0 – 2 M1: 0 – 2 M1R: 0 – 0.3	1 – 2 Factory setting: 1	RD

Object Name	Object Type	Description	Values	COV Increment	Access
DeltaPnom_UnitSel	AV[129]	Nominal differential pressure in selected unit as per UnitSelPressure MV[127] More infos: see AV[122].		0.01 – 1000 Factory setting: 1	RD
BusWatchdog	AV[130]	Time until the release bus timeout monitoring in s If BusWatchdog AV[130] ≠ 0, then monitoring of SpRel AO[1] and override MO[1] for change. If changes in SpRel AO[1] and override MO[1], then reset the bus timeout monitoring. If SpSource MV[122] = 1 (analogue), then BusWatchdog AV[130] only takes account of override MO[1].	0 – 3600 s Factory setting: 0 (bus timeout monitoring deactivated)	0.01 – 1000 Factory setting: 1	WR
Sens1Switch	BI[20]	Switch status of the switch at the sensor input If SenType MV[220] = 5 (switch), then Sens1Switch BI[20] = active. Status flags: (*6)	0: Inactive 1: Active	–	RD
BusTermination	BI[99]	Terminal resistor Shows whether the terminal resistor (120 Ω) has been activated via the service tools.	0: Deactivated 1: Activated	–	RD
SummaryStatus	BI[101]	Condensed status Groups together the status of the objects: "StatusSensor" MI[103] "StatusFlow" MI[104] "StatusActuator" MI[106] "StatusPressure" MI[109] "StatusDevice" MI[110]	Not equal to 1: OK 1: Not OK	–	RD
RmPCasacade	MV [10]	Room pressure cascade If RmPCascade MV[10] = 2 (active) or 3 (active fast), then sensor1 is the input for the room cascade (0 – 10 V). If ApplicationSel MV[2] =1 (volume flow control) or 3 (room pressure control), then RmPCascade MV [10] = active. Status flags: (*7)	1: Inactive 2: Active 3: Active fast (for M1R only)	–	RD
InternalActivity	MI[100]	Internal status	1: None 2: – 3: Adaption 4: Synchronisation	–	RD

Object Name	Object Type	Description	Values	COV Increment	Access
StatusSensor	MI[103]	Status of the differential pressure sensor If status end = automatic reset	1: OK 2: dP sensor not OK 3: dP sensor outside of measuring range 4: dP sensor incorrectly connected	–	RD
StatusFlow	MI[104]	Volume flow rate status If there is no volume flow rate within 600 s, then StatusFlow MI[104] = 3.	1: OK 2: – 3: No airflow detected	–	RD
StatusActuator	MI[106]	Status of the actuator Status flags: (*2)	1: OK 2: Actuator cannot be moved 3: Gear release active 4: Mechanical travel exceeded 5: Actuator not suitable for application	–	RD
StatusPressure	MI[109]	Differential pressure status If the differential pressure is not reached within 180 s, then StatusPressure MI[109] = 3.	1: OK 2: – 3: Pressure not reached	–	RD
StatusDevice	MI[110]	Status of the device during bus monitoring According to BusWatchdog AV[130].	1: OK 2: Bus timeout monitoring activated	–	RD
Override	MO[1]	Override control Overwrites the setpoint value with a forced command. Status flags: (*8)	1: None 2: OPEN 3: CLOSED 4: q_{vmin}/Δpmin 5: – 6: q_{vmax}/Δpmax Factory setting: None (1)	–	C
ApplicationSel	MV[2]	Display of application VRU-D3-M/B TR, VRU-M1-M/B TR - Flow control - Pressure control - Flow measurement VRU-M1R-M/B TR - Room pressure control	1: Flow control 2: Pressure control 3: Room pressure control 4: Flow measurement	–	RD
ControlMode	MV[100]	Control mode Status flags: (*9)	1: PosCtrl 2: FlowCtrl Factory setting: FlowCtrl	–	RD
OperationMode	MV[102]	Operating mode Only relevant for VRU-M1R-BAC. Status flags: (*10)	1: Negative pressure 2: Positive pressure	–	WR
Command	MV[120]	Release test functions Status flags: (*2)	1: None 2: Adaption 3: – 4: Reset Factory setting: None	–	WR
UnitSelAirFlow	MV[121]	Selection of the volume flow unit	1: – 2: m³/h 3: l/s	–	WR

Object Name	Object Type	Description	Values	COV Increment	Access
		The selected unit is indicated in AI[19] and AV[104]	4: – 5: – 6: – 7: cfm		
SpSource	MV[122]	Selection of the setpoint value setting If SpSource MV[122] = 1 (analogue), then SpAnalog AI[6] = active. If SpSource MV[122] = 2 (bus), then SpRel AO [1] = active.	1: Analogue (0 – 10 V, 2 – 10 V) 2: Bus (Modbus, BACnet, MP-Bus) Factory setting: Analogue	–	WR
UnitSelPressure	MV[127]	Selection of the pressure unit The selected unit is indicated in DeltaP_UnitSel AI[18] and DeltaPnom_UnitSel AV[129].	1: Pascal 3: Water column Factory setting: pascal	–	WR
UnitSelTemp	MV[128]	Selection of temperature unit The selected unit is located in AI[20].	1: K 2: °C 3: °F Factory setting: °C (2)	–	W
Sens1Type	MV[220]	Definition of the sensor type If Sens1Type MV[220] = 2 (active) or 3 (passive), then Sens1Analog AI[20] active. If Sens1Type MV [220] = 5 (switch), then Sens1Schalter BI[20] active.	1: None 2: Active sensor (in hybrid mode) 3: Passive sensor 4: – 5: Switch Factory setting: None	–	WR

RD = Read-only access
WR = Read/write access
C = Commendable with priority array
Status flags:
(*1) If gear disengagement pressed, then Overridden = 1
(*2) If ApplicationSel MV[2] = 3 (room pressure control) or 4 (flow measurement), then Out of Service = 1
(*3) If SpSource MV[122] = 2 (bus), then Out of Service = 1
(*4) If ApplicationSel MV[2] = 2 (pressure control) or 3 (room pressure control), then Out of Service = 1
(*5) If Sens1Type MV[220] = 1 (none), then Out of Service = 1
(*6) If Sens1Type MV[220] ≠ 5, then Out of Service = 1
(*7) If ApplicationSel MV[2] = 2 (pressure control) or 4 (flow measurement), then Out of Service = 1
(*8) If ApplicationSel MV[2] = 4 (flow measurement), then Out of Service = 1
(*9) If ApplicationSel MV[2] ≠ 1 (flow rate control), then Out of Service = 1
(*10) If ApplicationSel MV[2] ≠ 3 (room pressure control), then Out of Service = 1

Product details

Analogue interface 0 – 10 V DC or 2 – 10 V DC

In the delivery state, the setpoint must be specified via the analogue interface. If the setpoint value is specified via a digital communication interface, this can be changed to Modbus, BACnet or MP-Bus at any time via the TROX FlowCheck App. The analogue interface can be set for the signal voltage range 0 - 10 V DC or 2 - 10 V DC through the TROX FlowCheck App. The assignment of the volume flow setpoint or actual value to the voltage signal is shown in the characteristic diagrams.

Setpoint value setting

Variable operation

- In the variable operating mode, the setpoint is specified with an analogue signal at terminal 3. Setpoint specifications via the respective bus system are rejected
- The selected signal voltage range 0 – 10 V or 2 – 10 V DC is assigned to the volume flow rate range q_{vmin} – q_{vmax} assigned to
- Volume flow rate range q_{vmin} – q_{vmax} set at the factory according to the order code details
- Subsequent adjustment of q_{vmin} or q_{vmax} possible via adjustment device, TROX FlowCheck app or PC tool

Constant value mode

- In the operating mode fixed value operation, no analogue signal is required at terminal 3
- The value given by q_{vmin} is controlled through the fixed volume flow rate value
- Volume flow q_{vmin} set at the factory according to the order code details
- Subsequent adjustment of q_{vmin} possible via adjustment device, TROX FlowCheck app or PC tool

Actual value as feedback for monitoring or tracking control

- The actual volume flow rate measured by the controller can be captured as a voltage signal at terminal 5
- Selected signal voltage range 0 - 10 V DC or 2 - 10 V DC is applied to the volume flow range 0 - q_{vnom} shown
- In analogue mode, there is the parallel option of querying operating data via the Modbus interface (hybrid mode)

Override control

For special operating situations, the volume flow controller can be set to a special operating state (override control). The following modes are possible: control q_{vmin}, control q_{vmax}, damper blade open (OPEN), damper blade closed (CLOSED) or control stop.

Override controls via signal input Y or override control inputs z1, z2

Through suitable wiring of the inputs Y, z1, z2, the override controls can be activated according to the wiring diagrams via wiring with external switching contacts/relays (see wiring examples).

Override control CLOSED via command signal at signal input Y

With signal voltage range 0 - 10 V DC and setting value q_{vmin} = 0

- Flap CLOSED: Y < 0.45 V DC
- Modulating duty: Y > 0.55 V DC

With signal voltage range 0 - 10 V DC and q_{vmin} > 0

- If override control CLOSED is not possible via the command signal. The control process takes place over the entire signal voltage range

With signal voltage range 2 - 10 V DC and setting value q_{vmin} = 0

- Flap CLOSED: Y < 2.36 V DC
- Modulating duty: Y > 2.44 V DC

With signal voltage range 2 - 10 V DC and setting value q_{vmin} > 0

- Flap CLOSED: Y < 0.3 V DC
- Regulation q_{vmin}: Y > 0.3 V DC
- Modulating duty: Y > 2.44 V DC

Override controls in analogue mode via Modbus or BACnet interface

If the bus interface is also connected in analogue mode, override control can also be specified via Modbus register 1 or BACnet Object MO[1].

Override control for diagnosis

Activation via TROX FlowCheck App.

Prioritisation of different default options

Specifications for override controls via analogue are prioritised over Modbus/BACnet specifications.
Highest priority: Preset via analogue override control.
Medium priority: Specifications via the service plug (setting device, PC software) for test purposes.
Lowest priority: Default via Modbus/BACnet/MP-BUS.

Analogue hybrid operation

With analogue setpoint input via terminal 3 and analogue feedback via terminal 5, feedback via BACnet MS/TP or Modbus RTU is still possible.
The factory default setting for the bus interface is Modbus RTU; however, this can be changed via TROX FlowCheck App or PC-Tool.
Various operating parameters can be called up according to the bus interface list via Modbus RTU or BACnet MS/TP.
Forced controls q_{vmin}, q_{vmax}control damper in open position (OPEN) or control damper closed (CLOSED) possible via bus interface.

Digital communication interface

For a setpoint value specification via the bus interface, an on-site conversion with the TROX FlowCheck App is necessary. The bus interface can be set to Modbus, BACnet and MP-Bus. For smooth data exchange in the on-site bus network, it is necessary to set the communication parameters and the participant address for the bus interface. The communication parameters of the bus systems (address, baud rate, etc.) can be set using the TROX FlowCheck app. The interface provides standardised bus register/object access to the available data points.

Setpoint value setting

- In Modbus RTU operating mode (factory setting), the setpoint is specified by entering the volume flow setpoint [%] in Modbus register 0
- In the BACnet MS/TP operating mode, the setpoint is specified by specifying the volume flow setpoint [%] in the BACnet object AI[1]
- The percentage value refers to the volume flow rate range specified by q_{vmin} – q_{vmax} defined volume flow range
- Volume flow rate range q_{vmin} – q_{vmax} set at the factory according to the order code details
- Subsequent adjustment of q_{vmin} or q_{vmax} possible via setting device, TROX FlowCheck App, PC tool or via Modbus/BACnet interface

Actual value as feedback for monitoring or tracking control

- Both Modbus and BACnet show actual values in m³/h (factory setting). Other units such as l/s and cfm can also be selected.
- In addition to the volume flow rate actual value, other information can be read out using other Modbus registers/BACnet objects
- Overview of the registers/objects in the communication tables
- In bus mode the actual volume flow rate can be captured at terminal 5
- The volume flow rate range 0 – q_{vnom} always corresponds to the signal voltage range (0)2 – 10 V DC

Override control

For special operating situations, the volume flow controller can be set to a special operating state (override control). The following modes are possible: control q_{vmin}, control $q_{vmax}$the control damper is in the open position (OPEN), control damper closed (CLOSED) or control stop.

Priority control via the bus

Specifications are made via Modbus register 1 or via BACnet object type MO[1].

Override control by bus failure monitoring (Modbus)

In case of failure of the Modbus communication for a defined period of time, a predefined operating state q_{vmin}, q_{vmax}, OPEN or CLOSED can be activated.

- The override to be activated in case of bus failure is defined via Modbus register 108 or 109
- The determination after which bus failure time the override control is activated is made via Modbus register 109 or 110
- Any Modbus communication resets the bus failure monitoring timeout

Override control by bus failure monitoring (BACnet)

If BACnet communication fails for a specified period of time, a predefined operating state can be activated.

- The setpoint to be activated in the event of bus failure is determined via the Reliquish_Default of SpRel (Object AO1)
- Bus failure time is defined via BusWatchdog (object type AV [130])
- Communication on the data points SpRel (Object AO[1] and Override (Object MO[1]) resets the timeout of bus failure monitoring

Override controls for diagnosis

Activation via bus systems, external/on-site switching contacts (bridges), and TROX FlowCheck App.

Prioritisation of different default options

Specifications for override controls via switching contacts are prioritised over Modbus/BACnet specifications.

- Highest priority: Preset via override control by external wiring (switching contact, relay)
- Medium priority: Specifications via the service plug (TROX FlowCheck App) for test purposes
- Lowest priority: Default via Modbus/BACnet/MP bus

Characteristic of the setpoint value signal

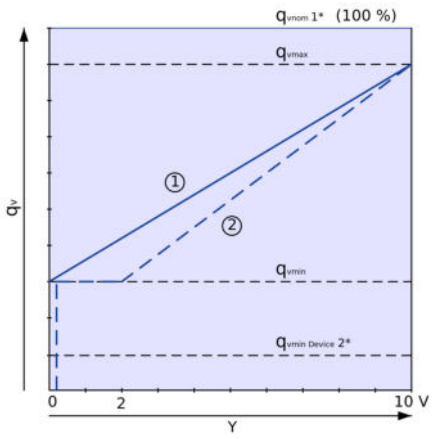

① Signal voltage range 0 – 10 V
② Signal voltage range 2 – 10 V
1* = q_{vnom} Nominal volume flow rate
2* = $q_{vmin\ unit}$ Acceptable minimum volume flow rate

Characteristic of the actual value signal

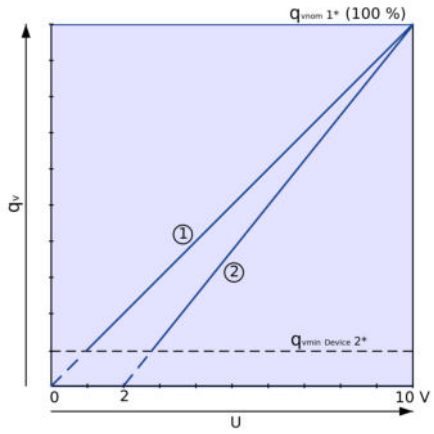

① Signal voltage range 0 – 10 V
② Signal voltage range 2 – 10 V
1* = q_{vnom} Nominal volume flow rate
2* = $q_{vmin\ unit}$ Acceptable minimum volume flow rate

Calculation of volume flow rate setpoint value at 0 – 10 V

$$q_{vset} = \frac{Y}{10\ V} \times (q_{vmax} - q_{vmin}) + q_{vmin}$$

Calculation of volume flow rate actual value at 0 – 10 V

$$q_{vact} = \frac{U}{10\ V} \times q_{vnom}$$

Calculation of volume flow rate setpoint value at 2 – 10 V

$$q_{set} = \frac{Y - 2\ V}{(10\ V - 2\ V)} \times (q_{vmax} - q_{vmin}) + q_{vmin}$$

Calculation of volume flow rate actual value at 2 – 10 V

$$q_{vact} = \frac{U - 2}{10\ V - 2\ V} \times q_{vnom}$$

View of plug-in terminal strips at the VRU

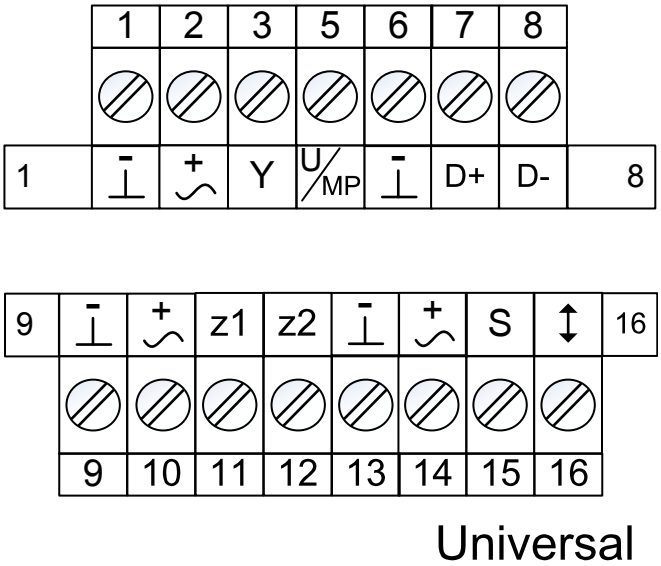

Nomenclature

1, 6, 9, 13: ⊥, – = Ground, neutral
2, 10, 14: ~, + = Supply voltage 24 V
3: Y = Setpoint signal Y and override controls
5: U/MP = Actual value signal or MP-Bus or service tool connection
7: D+ = B = C2 = RS-485 bus (BACnet MS/TP or Modbus RTU)
8: D- = A = C1 = RS-485 bus (BACnet MS/TP or Modbus RTU)
11, 12: z1, z2 = Forced control inputs
15: Extension for external sensor
16: Not used

Wiring diagram analogue control

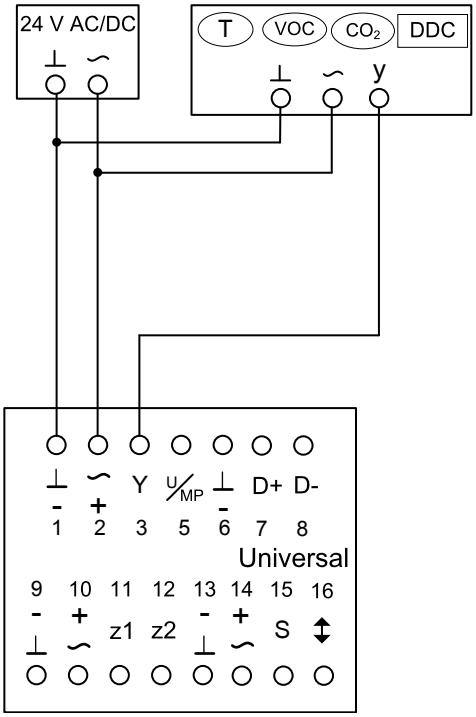

Nomenclature

1: ⊥, – = Ground, neutral
2: ~, + = Supply voltage 24 V AC/DC
3: Y = Setpoint signal and override controls
5: U/MP = Actual value signal

Notes

- T, VOC, CO2, DDC = Setpoint value default setting q_v
- Setpoint value and actual value signals depend on the signal voltage range, either 0 – 10 V DC or 2 – 10 V DC

Wiring diagram Modbus, BACnet operation

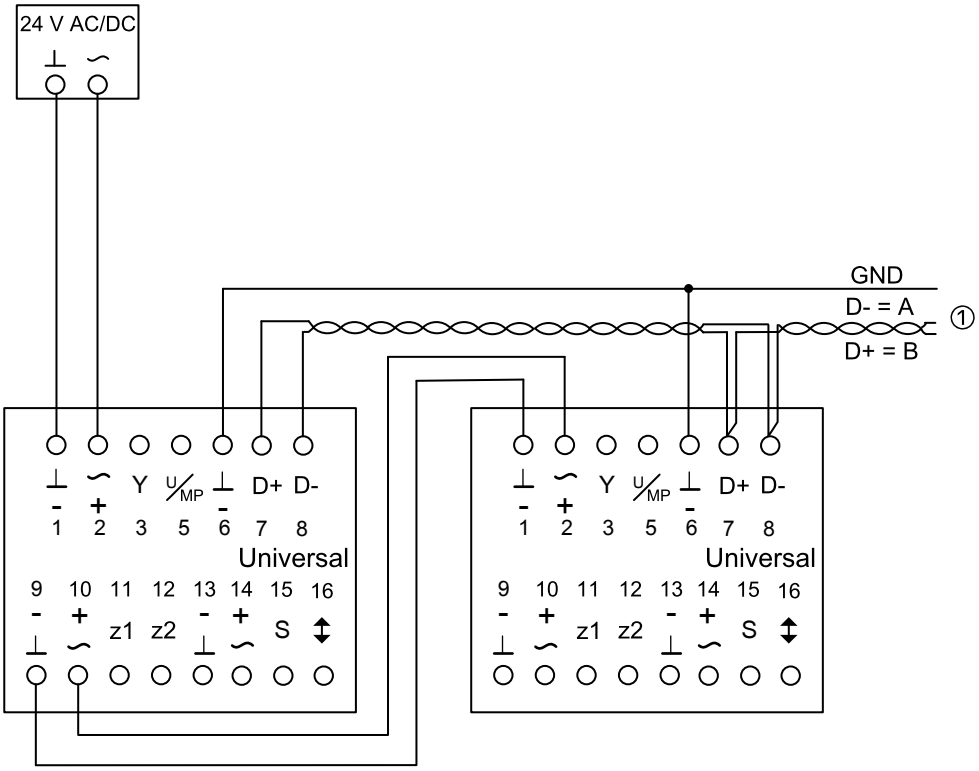

Nomenclature

1: ⊥, – = Ground, neutral
2: ~, + = Supply voltage 24 V AC/DC
6: GND = Common ground potential
7: D+ = Modbus/BACnet B, C2
8: D- = Modbus/BACnet A, C1

Note

- ① Additional network participants for Modbus/BACnet (maximum 32)
- Supply voltage and communication not galvanically isolated
- Voltage supply: Make sure that all devices on the bus have the same GND reference point
- Use terminal resistors on both ends of the bus. Bus terminating resistors integrated in the VRU can be activated with the service tool

MP-Bus connection diagram

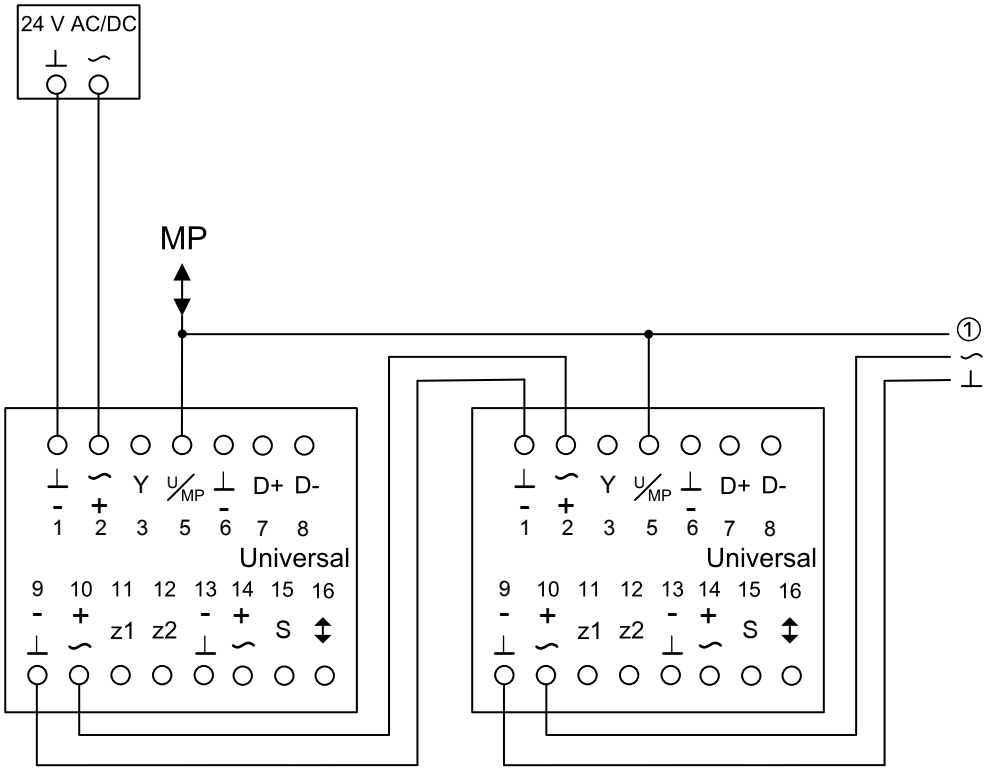

Nomenclature

1: ⊥, – = Ground, neutral
2: ~, + = Supply voltage 24 V AC/DC
5: U/MP = MP-Bus connection

Note

- ① Number of MP-Bus participants depends on the type of MP-Bus devices; maximum 16 participants
- Of which max. 8 MP participants (e.g. volume flow controller)
- Plus a maximum of 8 MPL participants (e.g. valve drives)
- Supply voltage and communication not galvanically isolated
- Voltage supply: Make sure that all devices on the bus have the same GND reference point.

Connection diagram hybrid operation

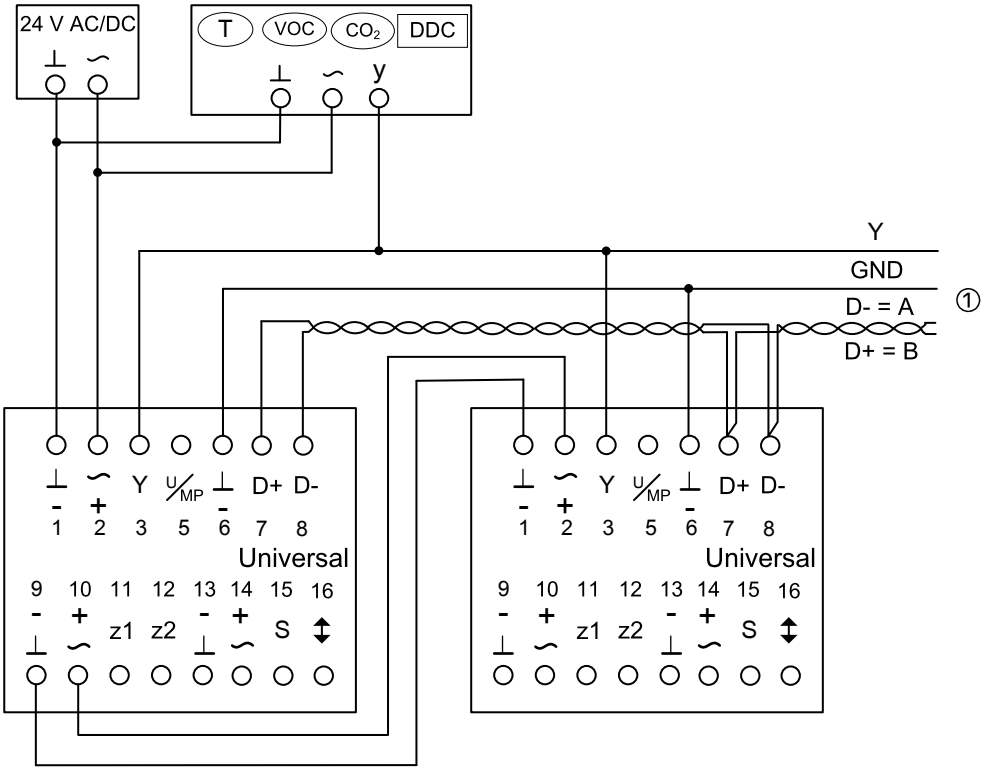

Nomenclature:

1: ⊥, – = Ground, neutral
2: ~, + = Supply voltage 24V AC/DC
6: GND = Common ground potential
7: D+ = Modbus/BACnet B, C2
8: D- = Modbus/BACnet A, C1

Notes

- T, VOC, CO 2 , DDC = Setpoint q_v
- ① Additional network participants for Modbus/BACnet (maximum 32)
- Supply voltage and communication not galvanically isolated
- Voltage supply: Make sure that all devices on the bus have the same GND reference point.
- Use bus terminating resistors at the ends of the bus line
- Bus terminating resistors integrated in the VRU can be activated with the service tool

Connection diagram for override controls, Alternative 1: Y-input

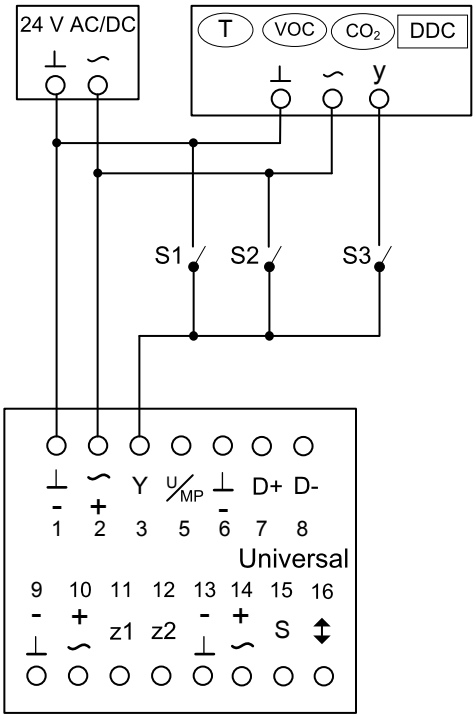

Nomenclature

1: ⊥, – = Ground, neutral
2: ~, + = Supply voltage 24 V AC/DC
3: Y = Setpoint signal and override controls
5: U/MP = Actual value signal or MP-Bus or service tool connection

Notes

- T, VOC, CO2, DDC = setpoint for q_v
- When combining several override controls, the switches must be interlocked to prevent short-circuits
- Setpoint value and actual value signals depend on the signal voltage range, either 0 – 10 V DC or 2 – 10 V DC
- Supply voltage and communication not galvanically isolated
- Voltage supply: Make sure that all devices on the bus have the same GND reference point
- Use terminal resistors on both ends of the bus. Bus terminating resistors integrated in the VRU can be activated with the service tool

Wiring variants Y-signal

Constant value mode q_{vmin} (override control q_{vmin})

- Only switch (connection) S1 may be closed
- Only works with signal voltage range 0 - 10 V DC

Override control q_{vmax}

- Only S2 has to be closed

Normal operation q_{vmin} – q_{vmax}

- Analogue setpoint setting e.g. by room temperature control
- Only S3 has to be closed

Override control, damper blade CLOSED

- Only S1 has to be closed
- Only works with signal voltage range 2 - 10 V DC

Connection diagram for override controls, Alternative 2: z1/z2 input

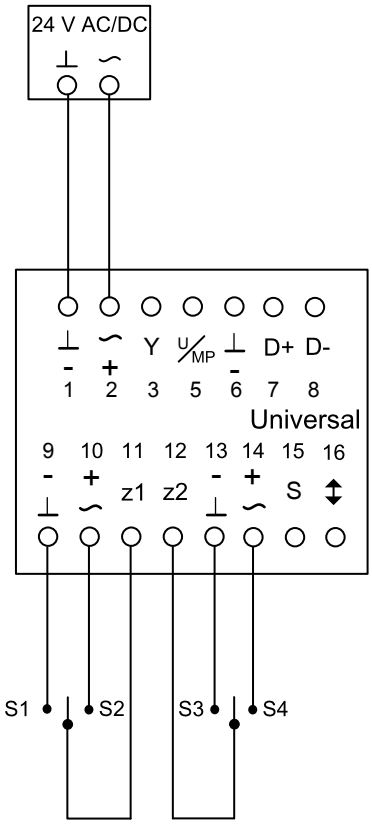

Nomenclature

9: ⊥, – = Ground, neutral
10: ~, + = Supply voltage 24 V AC/DC
11: Priority z1
12: Priority z2
13: ⊥, – = Ground, neutral
14: ~, + = Supply voltage 24 V AC/DC

Notes

- When combining several override controls, the switches must be interlocked to prevent short-circuits
- Setpoint value and actual value signals depend on the signal voltage range, either 0 – 10 V DC or 2 – 10 V DC
- Supply voltage and communication not galvanically isolated
- Voltage supply: Make sure that all devices on the bus have the same GND reference point.
- Use terminal resistors on both ends of the bus. Bus terminating resistors integrated in the VRU can be activated with the service tool

Wiring variants z1/z2 input

Override control, damper blade OPEN

- Only S2 has to be closed

Override control, damper blade CLOSED

- Only S3 has to be closed

Override control q_{vmax}

- Only S4 has to be closed

Control stop

- Only S1 has to be closed

Further override controls possible at the Y input.

Explanation

q_{vNom} [m3/h]; [l/s]; [CFM]
Nominal flow rate (100 %): The value depends on product type, nominal size and control component (attachment). Values are published on the internet and in technical leaflets and defined in the Easy Product Finder design programme. Reference value for calculating percentages (e.g. $q_{vmax.}$). Upper limit of the setting range and maximum volume flow rate setpoint value for the VAV terminal unit.

$q_{vmin\ Unit}$ [m3/h]; [l/s]; [CFM]
Technical minimum volume flow: The value depends on product type, nominal size and control component (attachment). Values are defined in the Easy Product Finder design programme Lower limit of the setting range and minimum volume flow rate setpoint value for the VAV terminal unit. Setpoint values below $q_{vmin\ unit,}$ (if q_{vmin} equals zero) may result in unstable control or shut-off.

q_{vmax} [m3/h]; [l/s]; [CFM]
Client-adjustable upper limit of the operating range for the VAV terminal unit: $q_{vmax.}$ can be set to less than or equal to q_{vNom} on the terminal unit. In case of analogue control of volume flow controllers (typically used), the maximum value of the setpoint signal (10 V) is assigned to the set maximum value ($q_{vmax.}$, see characteristics.

q_{vmin} [m3/h]; [l/s]; [CFM]
Client-adjustable lower limit of the operating range of the VAV terminal unit: q_{vmin} should be set to less than or equal to $q_{vmax.}$ q_{vmin} must not be set to less than $q_{vmin\ unit,}$ as the control may become unstable or the damper blade may close. q_{vmin} may equal zero. In case of analogue control of volume flow controllers (typically used), the minimum value of the setpoint signal (0 or 2 V) is assigned to the set minimum value (q_{vmin}, see characteristics.

q_v [m3/h]; [l/s]; [CFM]
Volume flow rate

Volume flow controller
Consists of a basic unit with an attached control component.

Basic unit
Unit for controlling volume flow rates without an attached control component. The main components include the casing with sensor(s) to measure the differential pressure and the damper blade to restrict the volume flow. The basic unit is also referred to as a VAV terminal unit. Important distinguishing features: Geometry or unit shape, material and connection variants, acoustic characteristics (e.g. optional acoustic cladding or integrated silencers), range of volume flow.

Control component
Electronic unit(s) mounted on the basic unit to control the volume flow rate, or the duct pressure, or the room pressure by adjusting the damper blade position. The electronic unit mainly consists of a controller with differential pressure transducer (integrated or external), and an integrated actuator (Easy and Compact controllers) or external actuator (Universal or LABCONTROL controller). Important distinguishing features: Transducer: dynamic transducer for clean air, or static transducer for polluted air. Actuator: Standard actuator (slow-running), spring return actuator for fail-safe position, or fast-running actuator. Interface technology: analogue interface or digital bus interface for connecting and recording signals and data.