Control units

BM0

Bus interface Modbus RTU

Bus interface BACnet MS/TP

Bus interface MP-Bus

Control component with dynamic transducer and choice of bus interface: Modbus RTU, BACnet MS/TP or MP bus

Compact unit for VAV terminal unit TVR, TVJ, TVT, TZ-Silenzio, TA-Silenzio, TVZ, TVA, TVM

- Controller, dynamic differential pressure transducer and actuator in one casing
- Use in ventilation and air conditioning systems, only with clean air
- Volume flow rates q_{vmin} and q_{vmax} are pre-set in the factory and saved in the controller as changed parameters
- High data transparency through standardised bus communication Modbus RTU, BACnet MS/TP and MP bus
- Setpoint value settings, override controls, parameter adjustment via bus communication
- Service access for manual adjustment devices and PC configuration software

General information	2	Technical data	7
Function	3	Product details bus operation	19
Specification text	4	Product details	21
Order code	5	Nomenclature	28
Variants	6		

General information

Application

- All-in-one control devices for VAV terminal units
- Dynamic differential pressure transducer, electronic controller, and actuator are fitted together in one casing
- Choice of various control options based on setpoint value default setting
- Volume flow rate control is based on setpoint values received from room temperature controller, central BMS, air quality controller or other devices as an analogue signal or via communication interface
- Override controls for activating q_{vmin}, q_{vmax}, shut-off or OPEN position can be set with a switch or relay or in the Modbus/ BACnet register
- The volume flow rate actual value is available as a network data point or as a linear voltage signal
- The damper blade position is available as a network data point
- Standard filtration in comfort conditioning systems allows for use of the controller in the supply air without additional dust protection
- The ZTH EU service tool and PC-Tool can be used to configure the controller and the communication parameters

With heavy dust levels in the room

- Install suitable extract air filters upstream, as a partial volume flow is routed through the transducer for volume flow rate measurement

If the air is contaminated with dust, fluff or sticky particles

- Use a control component with static differential pressure transducer, e.g. BUSN

Control strategy

- The volume flow controller works independently of the duct pressure
- Differential pressure fluctuations do not result in permanent volume flow rate changes
- To prevent the control from becoming unstable, a dead band is allowed within which the damper blade does not move.
- Flow rate range parameterised in the controller at the factory (q_{vmin}: minimum volume flow rate, q_{vmax}: maximum volume flow rate)
- Operating parameters are specified via the order code and parameterised in the factory

Operating modes

- Variable operation (V): setpoint value setting via Modbus

Interface

Communication interface

- Modbus RTU, RS485 (factory setting)
- BACnet MS/TP, RS485
- MP bus
- Data points, see bus lists

Alternatively

- Analogue interface with adjustable signal voltage range
- Analogue signal for volume flow rate setpoint value
- Analogue signal for volume flow rate actual value (factory setting)

Note

- The interface type is factory set
- Can be changed with service tools (by others)

Signal voltage ranges

When using the analogue interface (can be set with service tools)

- 0 – 10 V DC
- 2 – 10 V DC

Parts and characteristics

- Transducer for dynamic pressure measurements
- Overload protection
- Controller with factory fitted connecting cable
- Service interface for the connection of service tools
- Clamping device
- Indicator lights for indicating the operating mode
- Supply voltage and communication not galvanically isolated

Operating parameters

- q_{vmin} = 0 – 100 % of the nominal volume flow rate q_{vnom} adjustable
- q_{vmax} = 20 – 100 % of the nominal volume flow rate q_{vnom} adjustable

Construction

Type LMV-D3-M/B TR for volume flow controllers

- TVR, TZ-Silenzio, TA-Silenzio, TVZ, TVA, TVM

Type NMV-D3-M/B TR for volume flow controllers

- TVJ
- TVT up to 39.37 × 11.81 or 31.5 × 15.75 in.

Type SMV-D3-M/B TR for volume flow controllers

- TVT from 35.43 × 15.75 in.

Commissioning

- As the volume flow rates are factory set, the terminal units have to be installed at the specified locations
- Analogue interface: analogue signalling to be set with PC-Tool (by others)
- Modbus/BACnet/MP bus interface: additional commissioning steps may be required
- Operating parameters can be adjusted with service tools (by others)

Useful additions

Service tools:

- Adjustment device ZTH-EU (order code AT-VAV-B)
- PC-Tool software

Function

VAV terminal units control the volume flow in a closed loop, i.e. measurement – comparison – correction.
For volume flow rate measurement the effective pressure is measured first. This is done with a differential pressure sensor. The integral differential pressure transducer transforms the effective pressure into a voltage signal. The volume flow rate actual value is available as a voltage signal. The factory setting is such that 10 V DC always corresponds to the nominal flow rate (q_{vnom}).

The volume flow rate setpoint value comes from a higher-level controller (e.g. room temperature controller, air quality controller, central BMS). Variable volume flow control results in a value between q_{vmin} and q_{vmax}. It is possible to override the room temperature control, e.g. by a complete shut-off of the duct.
The controller compares the differential pressure setpoint value to the actual value and controls the actuator accordingly if there is a difference.

Principle of operation

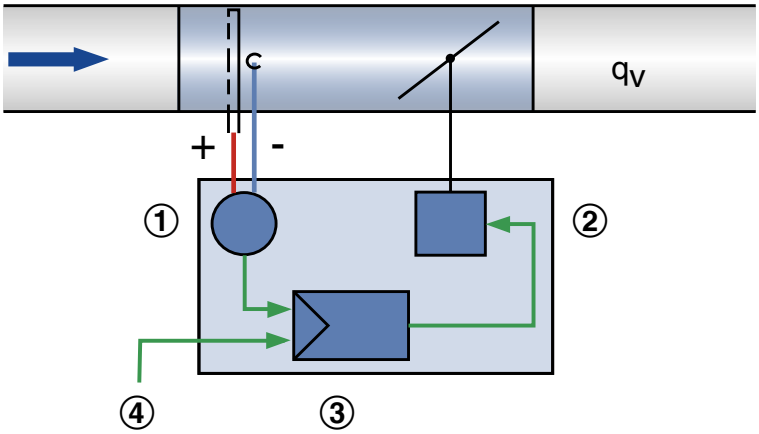

① Effective pressure transducer
② Actuator
③ Volume flow controller
④ Setpoint value signal

Specification text

This specification text describes the general properties of the product.

Category
- Compact controller for volume flow rate control
- Control of a constant or variable volume flow rate setpoint
- Electronic controller for applying a reference value and capturing an actual value for integration with a Modbus or BACnet based central BMS
- The actual value relates to the nominal volume flow rate so that commissioning and subsequent adjustment are simplified

Application
- Dynamic transmitter for clean air in ventilation and air conditioning systems

Supply voltage
- 24 V AC / DC

Actuator
- Integrated; slow running (running time approx. 120 – 150 s for 90°)

Installation orientation
- Either direction

Interface/signalling
- Modbus RTU (RS-485)
- BACnet MSTP (RS-485)
- MP bus
- Analogue hybrid mode
- Supply and communication not galvanically isolated
- Termination switchable

Connection
- Connecting cable with 6 wires

Interface information
- Modbus, BACnet, MP bus register
- Volume flow rate setpoint and actual value, damper blade position, error status, etc.

Special functions
- Activation of q_{vmin}, q_{vmax}, CLOSED and OPEN positions with Modbus, BACnet or MP bus register
- Optional operating mode: open loop (actuator with air flow measurement)

Parameter setting
- Parameters specific to the VAV terminal unit are factory set
- Operating values q_{vmin}, q_{vmax} and interface type are factory set
- Values can be adjusted at a later stage in the Modbus, BACnet or MP bus register or with optional tools, i.e. adjustment device or PC software (wire connection in each case)

Factory condition
- Electronic controller factory-mounted on the terminal unit
- Factory parameter settings
- Functional test under air; certified with sticker

Order code

Control component BM0 (shown together with TVR as an example)

TVR – D – P1 – / 8 / D2 / BM0 / V / 294.29 – 706.29 [cfm]
1 2 3 4 5 6 7 9 11

1 Type
TVR VAV terminal unit

2 Acoustic cladding
No entry: none
D With acoustic cladding

3 Material
No entry: galvanised sheet steel
P1 Powder-coated RAL 7001 (silver grey)
A2 Stainless steel construction

4 Duct connection
No entry: push-fit, suitable for ducts according to EN 1506; with groove for optional lip seal
FL Flanges on both ends

5 Nominal size [in.]
4, 5, 6, 8, 10

6 Accessories
No entry: without accessories
D2 Double lip seal both ends (push-fit only)
G2 Matching flanges for both ends (only with FL)

7 Attachments (control component)
BM0 Compact controller with dynamic transducer and Modbus RTU, BACnet MS/TP or MP bus interface

9 Operating mode
V Variable operation (adjustable setpoint value range)

11 Operating values for factory setting
Volume flow rate [cfm or l/s]
$q_{vmin} – q_{vmax}$

Order example: TVR-D-P1/8/D2/BM0/V/294.29-706.29 [cfm]

Type	TVR
Acoustic cladding	With acoustic cladding
Material	Powder-coated RAL 7001 (silver grey)
Duct connection	Push-fit, suitable for ducts according to EN 1506; with groove for optional lip seal
Nominal size [in.]	8
Accessories	Double lip seal both ends
Attachments (control component)	BC0 – Compact controller with dynamic transducer and Modbus RTU, BACnet MS/TP or MP bus interface
Operating mode	Variable operation
Operating values for factory setting	294.29 – 706.29 [cfm]

Variants

Compact controller BM0, type LMV-D3-M/B TR, 5 Nm

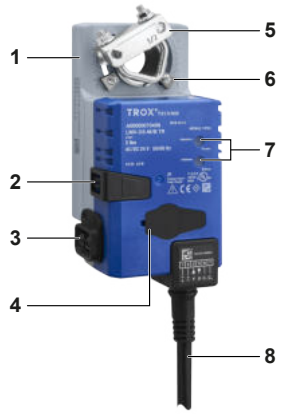

1: VAV Compact
2: Gear release button
3: Connections for differential pressure sensor
4: Service socket
5: Clamping device
6: Rotation stop
7: Push button with indicator light (top green, bottom yellow)
8: Connecting cable

Compact controller BM0, type NMV-D3-M/B TR, 10 Nm

1: VAV Compact
2: Gear release button
3: Connections for differential pressure sensor
4: Service socket
5: Clamping device
6: Rotation stop
7: Push button with indicator light (top green, bottom yellow)
8: Connecting cable

Compact controller BM0, type SMV-D3-M/B TR, 20 Nm

1: VAV Compact
2: Gear release button
3: Connections for differential pressure sensor
4: Clamping device
5: Rotation stop
6: Push button with indicator light (top green, bottom yellow)
7: Service socket
8: Connecting cable

Technical data

Compact controllers for VAV terminal units

VAV terminal units	Type of installation component	Part number
TVR, TZ-Silenzio, TA-Silenzio, TVZ, TVA	LMV-D3-M/B TR	A00000070458
TVJ and TVT up to 35.43 × 15.75 or 31.5 × 15.75	NMV-D3-M/B TR	A00000070469
TVM	2x LMV-D3-M/B TR	A00000070458
TVJ	NMV-D3-M/B TR	A00000070469
TVT up to 35.43 × 11.81 or 31.5 × 15.75	NMV-D3-M/B TR	A00000070469
TVT from 35.43 × 15.75	SMV-D3-M/B TR	A00000090713

Compact controller BM0, LMV-D3-M/B TR

Compact controller BM0, LMV-D3-M/B TR

Measurement principle/installation orientation	Dynamic measurement principle, position-independent
Supply voltage (AC)	24 V AC, 50/60 Hz
Supply voltage (DC)	24 V DC
Power rating (AC)	4 VA max. (8 A max. @ 5 ms)
Power rating (DC)	2 W max.
Torque	5 Nm
Bus connection	**Modbus RTU****, BACnet MS/TP, MP-Bus
Adjustable communication parameters Modbus RTU	Baud rate: 9600, 19200, **38400****, 76800, 115200; Address: **1**, 2, 3 – 247;** Parity: **1-8-N-2****, 1-8-N-1, 1-8-E-1, 1-8-O-1; **No. of nodes: up to 32 (without repeater);** **Terminal resistor: 120 Ω, integral, can be activated**
Adjustable communication parameters BACnet MS/TP	Baud rate: 9600, 19200, **38400****,**76800, 115200;** **Address: 0, 1**, 2, 3 – 127;** **No. of nodes: up to 32 (without repeater);** **Terminal resistor: 120 Ω, integral, can be activated**
Addressing	Required on-site: e.g. adjustment device ZTH-EU
Setpoint value signal input (analogue optional)	0 – 10 V or 2 – 10 V DC
Actual value signal output (analogue optional)	2 – 10 V DC
Connections	Cable, 0.009 × 0.001 in², preassembled
IEC protection class	III (protective extra-low voltage)
Protection level	IP 54
Functional range	19.2 – 28.8 V AC or 21.6 – 28.8 V DC
EC conformity	EMC to 2014/30/EU
Weight	1.1 lbs

**Factory setting

Compact controller BM0, NMV-D3-M/B TR

Compact controller BM0, NMV-D3-M/B TR

Measurement principle/installation orientation	Dynamic measurement principle, position-independent
Supply voltage (AC)	24 V AC, 50/60 Hz
Supply voltage (DC)	24 V DC
Functional range	AC 19.2 – 28.8 V/DC 21.6 – 28.8 V
Power rating (AC)	5 VA max. (8 A max. @ 5 ms)
Power rating (DC)	3 W max.
Torque	10 Nm
Bus connection	**Modbus RTU****, BACnet MS/TP, MP-Bus
Adjustable communication parameters Modbus RTU	Baud rate: 9600, 19200, **38400****, 76800, 115200; Address: 1**, 2, 3 – 247; **Parity: 1-8-N-2**, 1-8-N-1, 1-8-E-1, 1-8-O-1;** **No. of nodes: up to 32 (without repeater);** **Terminal resistor: 120 Ω, integral, can be activated**
Adjustable communication parameters BACnet MS/TP	Baud rate: 9600, 19200, **38400****, 76800, 115200; Address: 0, 1**, 2, 3 – 127; **No. of nodes: up to 32 (without repeater);** **Terminal resistor: 120 Ω, integral, can be activated**
Addressing	Required on-site: e.g. adjustment device
Setpoint value signal input (analogue optional)	0 – 10 V or 2 – 10 V DC
Actual value signal output (analogue optional)	2 – 10 V DC
Connections	Cable, 0.009 × 0.001 in², preassembled
IEC protection class	III (protective extra-low voltage)
Protection level	IP 54
EC conformity	EMC to 2014/30/EU
Weight	1.54 lbs

**Factory setting

Compact controller BM0, SMV-D3-M/B TR

Compact controller BM0, SMV-D3-M/B TR

Measurement principle/installation orientation	Dynamic measurement principle, position-independent
Supply voltage (AC)	24 V AC, 50/60 Hz
Supply voltage (DC)	24 V DC
Power rating (AC)	6.5 VA max. (8 A max. @ 5 ms)
Power rating (DC)	3.5 W max.
Torque	20 Nm
Bus connection	**Modbus RTU****, BACnet MS/TP, MP bus
Modbus RTU communication parameters to be set	Baud rate: 9600, 19200, **38400****, 76800, 115200; Address: **1****, 2, 3 – 247; Parity: **1-8-N-2****, 1-8-N-1, 1-8-E-1, 1-8-O-1; No. of nodes: up to 32 (without repeater); Terminal resistor: 120 Ω, integral, can be activated
BACnet MS/TP communication parameters to be set	Baud rate: 9600, 19200, **38400****, 76800, 115200; Address: 0,**1****,2.3 – 127; No. of nodes: up to 32 (without repeater); Terminal resistor: 120 Ω, integral, can be activated
Addressing	By others; with an adjustment device, for example
Setpoint value signal input (analogue as an option)	0 – 10 V or 2 – 10 V DC
Actual value signal output (analogue as an option)	2 – 10 V DC
Connections	Plug-in cable, 0.009 × 0.001 in²
IEC protection class	III (protective extra-low voltage)
Protection level	IP 54
Functional range	AC 19.2 – 28.8 V/DC 21.6 – 28.8 V
EC conformity	EMC to 2014/30/EU
Weight	1.54 lbs

**Factory setting

Commissioning

- As the volume flow rates are factory set, the terminal units have to be installed at the specified locations
- Comply with the volume flow rate control ranges of the VAV terminal units; do not set a volume flow rate lower than the minimum flow rate
- Additional commissioning steps for setting up the bus communication (assignment of device addresses) may be required after installation and wiring
- Additional commissioning steps (using a service tool) may also be required for integrating the control component with the local network

Additional commissioning steps

- If the Modbus interface is used:
  Adjust the (factory set) device address and communication parameters, for example
- If the BACnet interface is used:
  Use the service tool to set the type of communication interface to BACnet to change, for example, the device address and communication settings
- If the MP bus interface is used:
  Use the service tool to set the type of communication interface to MP bus to change, for example, the device address and communication settings

LEDs and operation

Green LED/push button

- Off: no power
- On: power is being supplied
- Blinking: address mode is active; blinking frequency depends on the set address 1 – 16
- Press the push button:
  during normal operation to start rotation angle adjustment
  in address mode to confirm the set address 1 – 16

Yellow LED/push button

- Off: normal operation
- On: adaption or synchronisation in progress **or** control component in address mode (green LED is blinking)
- Flickering: communication is active (only with Modbus or BACnet)
- Keeping the push button pressed for more than 5 s when you switch on the device resets the communication parameters to the factory settings

Additional functions with Modbus or BACnet:

- Normal operation: Press the push button for more than 3 s to switch the address mode for quick addressing on or off
- In address mode: Press the push button several times to set the bus address (press 1 × for address 1, 2 × for address 2, etc.)

Service tool range of functions

Function/parameter setting	PC-Tool	ZTH-EU[1]
Setting of q_{vmin}, q_{vmax}	R, W	R, W
Modbus, BACnet settings (address, communication parameters)	-	R, W
MP bus settings (address)	R, W	R, W
Setpoint value default setting via analogue connection or bus (Modbus, BACnet or MP bus)	-	R,W
Signal voltage range setting 0 – 10 V or 2 – 10 V DC for analogue interface	R, W	R, W

Note:

R,W = Read and write access
R = Read only
W = Write
- = Function is not available with this service tool.
[1]minimum version for ZTH-EU Firmware: V 2.09.0004

To ensure flawless use, the service tools should always be kept up to date with the latest software version.
Information on current versions/updates for PC-Tool software and adjustment device ZTH-EU can be found on the Belimo Hompage www.belimo.com.

Modbus RTU communication interface

Number	Register Address	Description	Range Enumeration	Unit	Scaling	Access
1		Setpoint value Setpoint value between q_{vmin} and q_{vmax}	0 – 10000 Factory setting: 0	%	0.01	[R / W]
2	1	Override control Overwrites the setpoint value with override control	0: None 1: OPEN 2: CLOSED 3: q_{vmin} 4: q_{vmid} 5: q_{vmax} Factory setting: None (0)	-	-	[R / W]
3	2	Command triggering - Release of functions for service and test purposes. Reset resets the controller and clears internal error memory such as register 105.	0: None 1: Adaptation 2: Test 3: Synchronisation 4: Reset Factory setting: None (0)	-	-	[R / W]
4	3	Type of actuator	0: Actuator not connected/not known 1: Actuator air/water with/ without safety function 2: Volume flow controller VAV/ EPIV 3: Fire damper 4: Energy valve 5: 6way EPIV	-	-	[R]
5	4	Current damper blade position (%)	0 – 10000	%	0.01	[R]
6	5	Damper blade angle (°)	0 – max.	°	1	[R]
7	6	Relative volume flow rate related to q_{vnom}	0 – 10000	%	0.01	[R]
8	7	Absolute volume flow rate related to q_{vnom}	0 – q_{vnom}	m^3/h	1	[R]
9	8	Sensor value in mV	0 – 65353	mV	1	[R]
10	9	-	-	-	-	[–]
11	10	Absolute volume flow rate in selected volume flow unit acc. to register 15 (Lowword)	-	UnitSel	0.0001	[R]
12	11	Absolute volume flow rate in selected volume flow unit acc. to register 15 (Highword)	-	UnitSel	0.0001	[R]
13	12	Analogue setpoint value (%). Shows the setpoint value in % with control input signal.	0 – 10000	%	0.01	[R]
100	99	Bus terminal resistor. Indicates whether the terminating resistor (120 Ω) is active or deactivated.	0: Inactive 1: Active Factory setting: inactive (0)	-	-	[R / W*]
101	100	Serial number, part 1	-	-	-	[R]
102	101	Serial number, part 2	-	-	-	[R]
103	102	Serial number, part 3	-	-	-	[R]
104	103	Firmeware Version. Example: 302, Version 3.02	-	-	-	[R]
105	104	Malfunctions and service information	Bit1: Mechanical travel exceeded Bit2: Actuator cannot be moved (e.g. mechanical overload)	-	-	[R]

Number	Register Address	Description	Range Enumeration	Unit	Scaling	Access
			Bit8: Internal activity (e.g. test run, adaptation) Bit9: Gear release active Bit10: Bus monitoring triggered			
106	105	Setting work areas q_{vmin} Requirements q_{vmin}vmax Vmax in the area 0 - 100 % q_{vnom}	0 – q_{vmax} Standard: 0	%	0.001	[R / W*]
107	106	Setting work areas q_{vmax} Requirements q_{vmax}vmin Vmax in the area 20 - 100 % q_{vnom}	q_{vmin} –10000 Standard: 10000	%	0.01	[R / W*]
108	107	Sensor type	0: None 1: Active sensor (in hybrid mode) 2: - 3: - 4: Switch contact Factory setting: None (0)	-	-	[R / W*]
109	108	Bus timeout monitoring	0: Last setpoint value 1: Fast close – CLOSED 2: Quick open – OPEN 3: Center position Factory setting: Last setpoint value (0)	-	-	[R / W*]
110	109	Time until release bus timeout monitoring	0 - 3600 seconds Factory setting: 0 (bus timeout monitoring deactivated)	s	1	[R / W*]
111	110	Nominal volume flow rate [m³/h]	-	m³/h	1	[R]
112	111	-	-	-	-	[–]
113	112	Nominal volume flow rate in selected volume flow unit acc. to Reg 118 (LowWord)	-	UnitSel	0.001	[R]
114	113	Nominal volume flow rate in selected volume flow unit acc. to 118 (HighWord)	-	UnitSel	0.001	[R]
115	114	-	-	-	-	[–]
116	115	-	-	-	-	[–]
117	116	Control mode	0: Position control (open loop) 1: Volume flow control	-	-	[R / W*]
118	117	Unit selection	0: m³/s 1: m³/h 2: l/s 3: l/min 4: l/h 5: gpm 6: cfm Standard m³/h (1)	-	-	[R / W*]
119	118	Setpoint value setting	0: Analogue (0 – 10 V, 2 – 10 V) 1: Bus (Modbus, BACnet, MP-Bus) Factory setting: Bus (1)	-	-	[R / W*]

R = Read-only access to register
R/W = Read/write access to register
R/W* = Limited read/write access to register
Registers from 100 with write access are persistent (stored in EEPROM), regular or cyclical writing must be avoided.

Object processing

Object type	Optional properties	Writeable properties
Analogue input [AI]	Description COV Increment	COV Increment
Analogue Output [AO]	Description COV Increment	Present Value COV Increment Relinquish Default
Analogue Value [AV]	Description COV Increment	Present Value COV Increment
Binary Input [BI]	Description Active Text Inactive Text	
Device	Description Location Active COV Subscriptions Max Master Max Info Frames Profile Name	Object Identifier Object Name Location Description APDU Timeout (1000 – 60000) Number Of APDU Retries (0 – 10) Max Master (1 – 127) Max Info Frames (1 – 255)
Multi-state Input [MI]	Description State Text	
Multi-state Output [MO]	Description State Text	Present Value Relinquish Default
Multi-state Value [MV]	Description State Text	Present Value (if marked)

Processing of services

- The device does not support the services "Create object" and "Delete object"
- The specified maximum length of the writable character strings is based on single-byte characters

1. Object name 32 characters
2. Location 64 characters
3. Description 64 characters

- The device supports the DeviceCommunicationControl Services, no password necessary
- A maximum of 6 active COV subscriptions with a run time of 1 – 28800 s (maximum of 8 h) is supported

Protocol Implementation Conformance Statement – PICS (general information)

Date	2020-06-11
Vendor name	TROX GmbH
Vendor ID	329
Product name	VRU-D3-BAC, VRU-M1-BAC, VRU-M1R-BAC
Product model number	VRU – BAC
Application software version	01.02.0001
Firmware revision	10.02.0000
BACnet Protocol Revision	12
Product description	Controller for VAV/CAV and pressure applications
BACnet Standard Device Profile	BACnet Application Specific Controller (B-ASC)
BACnet Interoperability Building Blocks Supported	Data Sharing – ReadProperty-B (DS-RP-B) Data Sharing – ReadPropertyMultiple-B (DS-RPM-B) Data Sharing – WriteProperty-B (DS-WP-B) Data Sharing – WritePropertyMultiple-B (DS-WPM-B) Data Sharing – COV-B (DS-COV-B) Device Management – DynamicDeviceBinding-B (DM-DDB-B) Device Management – DynamicObjectBinding-B (DM-DOB-B) Device Management – DeviceCommunicationControl-B (DM-DCC-B)
Segmentation Capability	No
Data Link Layer Options	MS/TP master, baud rates: 9600, 19200, 38400, 76800, 115200
Device Address Binding	No static device binding supported
Networking Options	None
Character Sets Supported	ISO 10646 (UTF-8)
Gateway Options	None
Network Security Options	Non-secure device

Communication interface BACnet MS/TP

Object Name	Object Type	Description	Values	COV Increment	Access
Device	Device [Inst.No]		0 – 4194302 Default: 1	-	W
RelPos	AI[1]	Damper blade position in % Overridden = 1 (gear latch pressed)	0 – 100	0.01 – 100 Standard: 1	R
AbsPos	AI[2]	Absolute position in ° Overridden = 1 (gear latch pressed)	0 - max. rotation angle	0.01 – 65353 Factory setting: 1	R
SpAnalogue	AI[6]	Analogue setpoint value in % Shows the analogue setpoint value in %, if setpoint value setting is in (SpSource[122]) Analogue (1) If setpoint value setting (SpSource[122]) Bus (2) = then Out_Of_Service is TRUE	0 – 100	0.01 – 100 Standard: 1	R
RelFlow	AI[10]	Relative volume flow rate in %	0 – 100	0.01 – 100 Standard: 1	R
AbsFlow_UnitSel	AI[19]	Absolute volume flow rate of selected unit acc. to [121]	0 – V_{nom}	0.01 – 1000 Standard: 1	R
Sens1Analogue	AI[20]	Sensor 1 is an analogue value in mV Analogue value in mV, if Sensor1Type MV[220] is active. If (sensor1type MV[220]) = 2 (not active) or (SpSource MV [122]) = 2 (Bus), Out_of_Service = TRUE	-	0.01 – 1000 Standard: 1	R
SpRel	AO[1]	Relative setpoint value in % Setpoint value between q_{vmin} AV[97] and q_{vmax} [98] (Only with bus control input signal) If SpSource (MV[122]) = 1 (Analogue), then Out_of_Service = TRUE	0 – 100 Factory setting: 0	0.01 – 100 Factory setting: 1	C
Min.	AV[97]	Minimum setpoint value in % (q_{vmin}) Requirement: $q_{vmin} < q_{vmax}$ q_{vmin} in the range 0 - 100 & q_{vnom}	0 – V_{max} Factory setting: 0	0.01 – 100 Factory setting: 1	W
Max.	AV[98]	Minimum setpoint value in % (q_{vmax}) Requirement: $q_{vmax} > q_{vmin}$ q_{vmax} in the range 20 - 100 % of q_{vnom}	V_{min} – 100 Standard: 100	0.01 – 100 Standard: 1	W
Vnom_UnitSel	AV[104]	Current volume flow rate as per selected volume flow unit (UnitSelFlow MV[121])	-	0.01 – 100 Standard: 1	R
Bus Watchdog	AV[130]	Time until the release bus timeout monitoring in s If Present_Value ≠ 0, then write access to Present_Value is monitored by AO[1] and MO[1]. Writing to Present_Value AO[1] MO[1] resets the timer. In hybrid mode, only write accesses to MO[1] are monitored.	0 – 3600 s Factory setting: 0 (bus timeout monitoring deactivated)	0.01 – 1000 Standard: 1	W
Sens1Switch	BI[20]	Switch status of the switch at the sensor input. If SenType MV [122] = 5 (switch) If SensType MV [122] ≠ 5 Out_of_Service = TRUE	Inactive_Text: Switch not active Active_Text: Switch active	-	R

Object Name	Object Type	Description	Values	COV Increment	Access
BusTermination	BI[99]	Terminal resistor Shows whether the terminal resistor (120 Ω) has been activated via the service tools.	Inactive_Text: Switch not active Active_Text: Switch active	-	R
SummaryStatus	BI[101]	Condensed status Summary status (MI[106], MI[110])	Inactive_Text: no error Active_Text: Error	-	R
InternalActivity	MI[100]	Status Activity	1: None 2: Test 3: Adaptation	-	R
StatusActuator	MI[106]	Status of the actuator	1: OK 2: Actuator cannot be moved 3: Gear release active 4: Mechanical travel exceeded	-	R
StatusDevice	MO[110]	Status of the unit Shows the general status of the device	1: OK 2: Bus timeout monitoring activated	-	R
Override	MO[1]	Override control Overwrites the setpoint value (SpRel AO[1]) with a forced command.	1: None 2: OPEN 3: CLOSED 4: q_{vmin} 5: q_{vmid} 6: q_{vmax} Factory setting: None (1)	-	C
Command	MV[120]	Release test functions	1: None 2: Adaptation 3: Test 4: Reset Factory setting: None (1)	-	W
UnitSelFlow	MV[121]	Unit selection The selected unit is indicated in AI[19] and AV[104].	1: m³/s 2: m³/h 3: l/s 4: l/min 5: l/h 6: gpm 7: cfm Factory setting: m³/h (2)	-	W
ControlMode	MV[122]	Setpoint value setting	1: Analogue (0 – 10 V, 2 – 10 V) 2: Bus (Modbus, BACnet, MP-Bus) Factory setting: Bus (2)	-	W
ControlMode	MV[223]	ControlMode	1: Position control (OponLoop) 2: Volume flow control	-	W
Sens1Type	MV[220]	Definition of the sensor type for the analogue input	1: None 2: Active sensor (in hybrid mode) 5: Switch Factory setting: None (1)	-	W

Product details bus operation

Bus operation
The controller is supplied from the factory with operating mode Modbus-RTU. The operating mode can be switched to BACnet, MP bus or analogue at any time using the service tool ZTH-EU. For a smooth exchange of data in the bus network provided by others, the communication parameters and the user address for the bus interface are required. The communication parameters for the bus systems (address, baud rate etc.) can be set using the ZTH-EU. The interface provides standardised bus register/object access to the available data points.

Setpoint value default setting
- In the operating mode Modbus RTU (factory setting), the setpoint value is only set by specifying the volume flow rate set point value [%] in the Modbus register 0.
- The transferred percentage value refers to the volume flow rate range specified by q_{vmin} – q_{vmax}
- Volume flow rate range q_{vmin} – q_{vmax} preset at the factory according to the order code
- Subsequent adjustment of q_{vmin} or q_{vmax} possible using service tool ZTH-EU or Modbus/BACnet interface.

Actual value as feedback for monitoring or tracking control
- The actual values can be read off in cfm (factory setting) in both Modbus and BACnet.
  - Other units such as m³/s, l/s, l/min, l/h, gpm, cfm possible
- In addition to the volume flow rate actual value, further information on other Modbus registers/BACnet objects can be read out.
  - Overview of the registers/objects in the communication tables
- For diagnostic purposes, the volume flow rate actual value can be tapped at cable wire 5 in bus mode
  The volume flow rate range 0 – q_{vNom} always corresponds to the signal voltage range of (0)2 – 10 V DC

Override control

For special operating situations, the volume flow controller can be put in a special operating mode (override control). The following modes are possible: control P_{vmin}, control q_{vmax}, damper blade in the OPEN position or damper blade CLOSED.

Override control via the bus

This is set via the Modbus register 1 or via BACnet object type MO[1].

Override control via bus timeout monitoring (Modbus)

If the Modbus communication fails for a stipulated time period, a pre-defined operating mode q_{vmin}, q_{vmax}, OPEN or CLOSED can be activated.
- The override control to be activated upon bus timeout is specified via Modbus register 108
- The time period after which override control is activated upon bus timeout is specified via Modbus register 109
- Each Modbus communication resets the timeout of the bus timeout monitoring

Override control via bus timeout monitoring (BACnet)
If the BACnet communication fails for a specified period, a predefined operating state can be activated.

- The setpoint value to be activated upon bus timeout is specified via Relinquish_Default from SpRel (object AO1)
- Bus timeout period is defined via BusWatchdog (object type AV [130])
- Communication on the data points SpRel (Object AO[1] and Override (Object MO[1])

Override controls for diagnostic purposes
Activation via bus system, external/on-site switch contacts, ZTH-EU or PC software.

Prioritisation of various setting options

Settings for override controls via analogue are prioritised over Modbus/BACnet settings.
- Highest priority: setting via an analogue override control
- Medium priority: settings via the service connector (adjustment device, PC software) for test purposes
- Lowest priority: setting via Modbus/BACnet/MP-Bus

Product details

Analogue mode or hybrid mode 0 – 10 V DC or 2 – 10 V DC

The controller is supplied from the factory with operating mode Modbus-RTU. For analogue or hybrid mode, it must be switched over by others using the ZTH-EU or PC tool. The analogue interface can be adjusted for the signal voltage range 0 – 10V DC or 2 – 10 V DC using the PC tool. The assignment of the volume flow rate setpoint value or actual value for voltage signals is shown in the characteristic curves. In hybrid mode, an analogue control input signal with digital feedback as per the bus interface list is possible.

Analogue hybrid mode

- With analogue setpoint value setting via cable wire 3 and analogue feedback via cable wire 5, it is nevertheless possible to have feedback via BACnet MS/TP or Modbus RTU
- Override controls q_{vmin}, q_{vmax}, damper blade open (OPEN) or damper blade closed (CLOSED) via bus interface are possible
- Various operating parameters as per the bus interface list can be called up via Modbus RTU or BACnet MS/TP

Setpoint value default setting

Variable operation
- In the variable operating mode, the setpoint value setting is set at cable wire 3 with an analogue signal
  - Setpoint value settings set via the respective bus system are rejected
- The selected signal voltage range 0 – 10 V DC or 2 – 10 V DC is assigned to the volume flow rate range q_{vmin} – q_{vmax}
- Volume flow rate range q_{vmin} – q_{vmax} preset at the factory according to the order code
- Subsequent adjustment of q_{vmin} or q_{vmax} possible via service tool ZTH-EU or PC tool

Constant value mode
- In the constant value mode operating mode, an analogue signal is not required at cable wire 3
- The volume flow rate constant value set by q_{vmin} is regulated
- Volume flow rate q_{vmin} is preset at the factory according to the order code
- Subsequent adjustment of q_{vmin} possible via service tool ZTH-EU or PC tool

Actual value as feedback for monitoring or tracking control

- The actual volume flow rate measured by the controller can be tapped as a voltage signal at cable wire 5
- The selected signal voltage range 0 – 10V DC or 2 – 10V DC is shown in the volume flow rate range 0 – q_{vNom}
- In analogue mode, there is also the option of querying operating data using the Modbus interface

Override control

For special operating situations, the volume flow controller can be put in a special operating mode (override control). The following modes are possible: control P_{vmin}, control q_{vmax}, damper blade in the OPEN position or damper blade CLOSED.

Override controls via signal input Y

Thanks to appropriate wiring on the signal input Y, the override controls can be activated according to the connection diagrams via wiring with external switch contacts / relays (see wiring examples). OPEN and CLOSED are only available if the controller is supplied with alternating current (AC).

Override control CLOSED via control signal on control signal Y

- With signal voltage range 0 – 10 V DC: CLOSED is activated when q_{vmin} = 0 is set **and** control signal Y < 0>
- With signal voltage range 2 – 10 V DC: CLOSED is activated when control signal is Y < 2.4 VD DC

Override controls in analogue mode via Modbus interface

If the Modbus interface is additionally connected in analogue mode, an override control can also be specified via Modbus register 1.

Override control for diagnostic purposes

Activation via service tools ZTH-EU or PC tool

Prioritisation of various setting options

- Settings for override controls via analogue have priority over Modbus/BACnet settings
- Highest priority: setting via an analogue override control
- Medium priority: settings via the service connector (adjustment device, PC software) for test purposes
- Lowest priority: setting via Modbus/BACnet/MP-Bus

Characteristic of the setpoint value signal

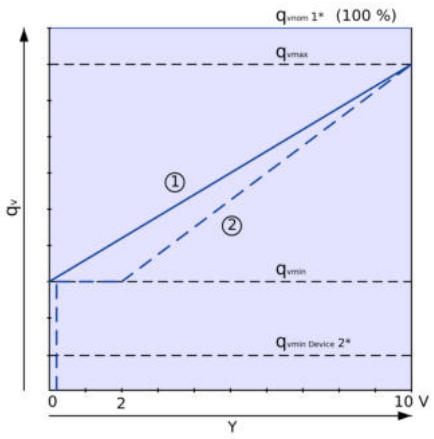

① Signal voltage range 0 – 10 V
② Signal voltage range 2 – 10 V
1* = $q_{vnom;}$ nominal volume flow rate
2* = $q_{vmin\ unit}$ minimum controllable volume flow rate

Characteristic of the actual value signal

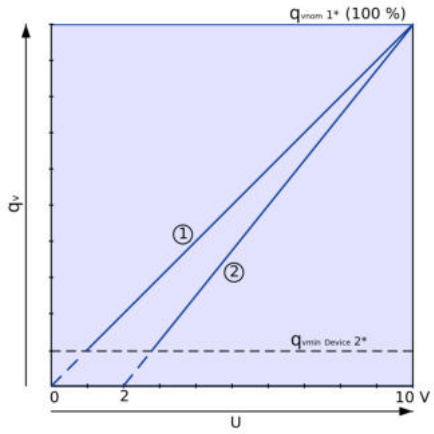

① Signal voltage range 0 – 10 V
② Signal voltage range 2 – 10 V
1* = $q_{vnom;}$ nominal volume flow rate
2* = $q_{vmin\ unit}$ minimum controllable volume flow rate

Calculation of nominal volume flow at 0 – 10 V

$$q_{vset} = \frac{Y}{10\,V} \times (q_{vmax} - q_{vmin}) + q_{vmin}$$

Calculation of actual volume flow at 0 – 10 V

$$q_{vact} = \frac{U}{10\,V} \times q_{vnom}$$

Calculation of nominal volume flow at 2 – 10 V

$$q_{vset} = \frac{Y - 2\,V}{(10\,V - 2\,V)} \times (q_{vmax} - q_{vmin}) + q_{vmin}$$

Calculation of actual volume flow at 2 – 10 V

$$q_{vact} = \frac{U - 2}{10\,V - 2\,V} \times q_{vnom}$$

Connecting cable core identification for BM0

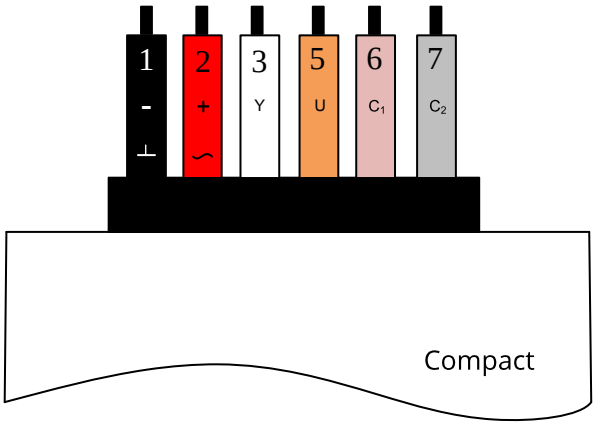

Nomenclature

⊥, – = Ground, neutral
~, + = Supply voltage 24 V AC/DC
Y = Setpoint value signal and local override controls
U = Actual value signal or MP bus or service tool connection
C1 = D- = A = RS-485 bus (BACnet MS/TP or Modbus RTU)
C2 = D+ = B = RS-485 bus (BACnet MS/TP or Modbus RTU)

Note

- Setpoint value and actual value signals depend on the signal voltage range, either 0 – 10 V DC or 2 – 10 V DC
- Supply voltage and bus connections not galvanically isolated

Control input signal via BACnet MS/TP or Modbus RTU

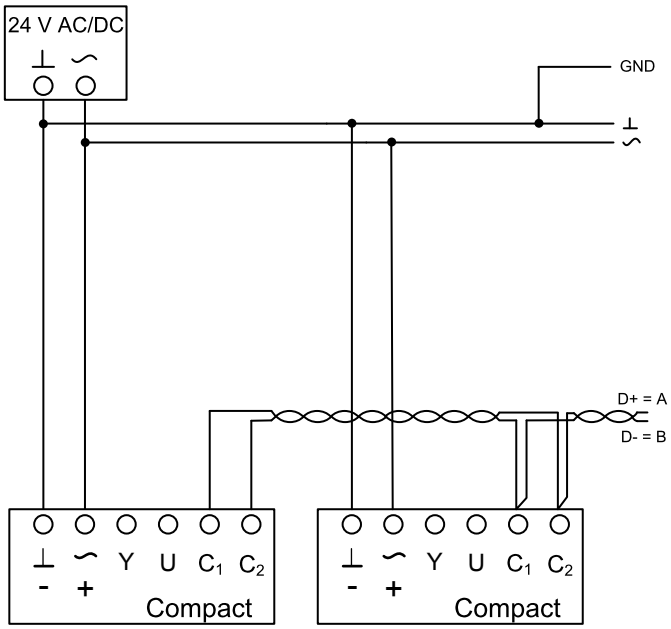

Nomenclature

⊥, – = Ground, neutral
~, + = Supply voltage 24 V AC/DC
C1 = D- = A = RS-485 bus (BACnet MS/TP or Modbus RTU)
C2 = D+ = B = RS-485 bus (BACnet MS/TP or Modbus RTU)

Notes:

- Supply voltage and communication not galvanically isolated
- Voltage supply: Make sure that all devices on the bus have the same GND reference point.
- Use terminal resistors on both ends of the bus. The integral terminal resistors can be activated with the service tool

Control input signal via MP-Bus

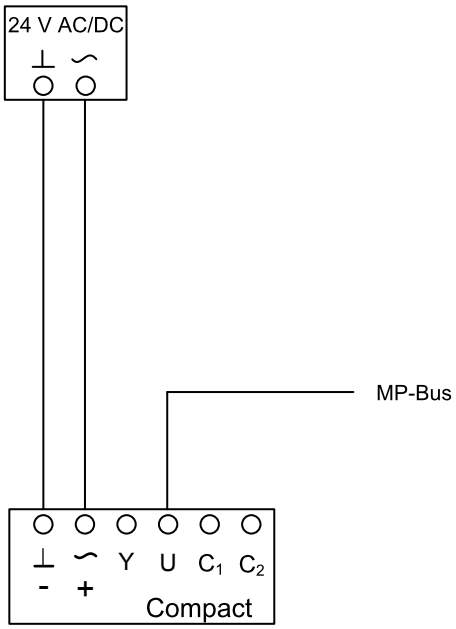

Nomenclature

⊥, – = Ground, neutral
~, + = Supply voltage 24 V AC/DC
U = MP bus

Control input signal 0 (2) - 10 V and override control with Bus feedback (hybrid operation))

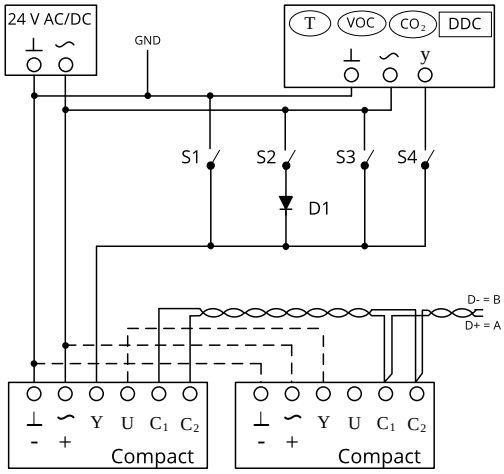

Nomenclature

⊥, – = Ground, neutral
~, + = Supply voltage 24 V AC/DC
Y = Setpoint value signal and local override controls
U = Actual value signal
C1 = D- = A = RS-485 bus (BACnet MS/TP or Modbus RTU)
C2 = D+ = B = RS-485 bus (BACnet MS/TP or Modbus RTU)

Note
T, VOC, CO2, DDC = Setpoint value default setting q_v
D1 = Diode for override control, e.g. 1N4007

- When combining several override controls the switches must be interlocked to prevent short-circuits
- Setpoint value and actual value signals depend on the signal voltage range, either 0 – 10 V DC or 2 – 10 V DC
- Supply voltage and communication not galvanically isolated
- Voltage supply: Make sure that all devices on the bus have the same GND reference point.
- Use terminal resistors on both ends of the bus. The integral terminal resistors can be activated with the service tool

Switch settings

q vmin – q vmax control
- e.g. for room temperature control
- Only S4 has to be closed

Override control, qvmax
- Only S3 has to be closed

Override control, damper blade OPEN
- Only S2 has to be closed
- Only with AC voltage supply

Override control, damper blade CLOSED
- Only S1 has to be closed

Damper blade CLOSED with setpoint value signal
- Only S4 has to be closed
- For other parameters, e.g. signal voltage range, q vmin setting and shut-off voltage, see the product details for analogue or hybrid operation

Nomenclature

q_{vNom} [cfm]
Nominal flow rate (100 %): The value depends on product type, nominal size and control component (attachment). Values are published on the internet and in technical leaflets and stored in the Easy Product Finder design program. Reference value for calculating percentages (e.g. q_{vmax}). Upper limit of the setting range and maximum volume flow rate setpoint value for the VAV terminal unit.

$q_{vmin\ Unit}$ [cfm]
Technically possible minimum volume flow rate: The value depends on product type, nominal size and control component (attachment). Values are stored in the Easy Product Finder design program. Lower limit of the setting range and minimum volume flow rate setpoint value for the VAV terminal unit. Setpoint values below $q_{vmin\ unit}$ (if q_{vmin} equals zero) may result in unstable control or shut-off.

q_{vmax} [cfm]
Upper limit of the operating range for the VAV terminal unit that can be set by customers: q_{vmax} can be set to less than or equal to q_{vnom} For analogue signalling to volume flow controllers (typically used), the maximum value of the setpoint signal (10 V) is assigned the set maximum value (q_{vmax}) (see characteristic).

q_{vmin} [cfm]
Lower limit of the operating range for the VAV terminal unit that can be set by customers: q_{vmin} should be set to less than or equal to q_{vmax} . Do not set q_{vmin} to less than $q_{vmin\ unit}$ as the control may become unstable or the damper blade may close. q_{vmin} may equal zero. In case of analogue signalling to volume flow controllers (which are typically used), the set minimum value (q_{vmin}) is allocated to the minimum setpoint signal (0 or 2 V) (see characteristic).

q_v [cfm]
Volume flow rate

VAV terminal unit
Consists of a basic unit with an attached control component.

Basic unit
Unit for controlling a volume flow without an attached control component. The main components include the casing with sensor(s) to measure the effective pressure and the damper blade to restrict the volume flow. The basic unit is also referred to as a VAV terminal unit. Important distinguishing features: Geometry or unit shape, material and types of connection, acoustic characteristics (e.g. acoustic cladding or integral sound attenuator), volume flow rate range.

Control component
Electronic unit(s) mounted on the basic unit to control the volume flow rate or the duct pressure or the room pressure by adjusting the damper blade position. The electronic unit consists basically of a controller with effective pressure transducer (integral or external) and an integral actuator (Easy and Compact controllers) or external actuator (Universal or LABCONTROL controllers). Important distinguishing features: Transducer: dynamic transducer for clean air or static transducer for contaminated air. Actuator: slow-running actuator as standard, spring return actuator for safe position, or fast-running actuator. Interface: analogue interface or digital bus interface for the capturing of signals and data.