Control components for VAV terminal units

BC0

Bus interface MP-Bus

TVR with attachment BC0

X-AIRCONTROL zone module MP-Bus

Control components for VAV terminal unit with dynamic transducer and analogue and MP-Bus interface

Compact device for use with VAV terminal units

- Controller, effective pressure transducer and actuator in one casing
- Use in ventilation and air conditioning systems, only with clean air
- Operation either with analogue interface or MP-Bus communication
- Suitable for constant and variable volume flow rates and q_{vmin}/q_{vmax} switching
- Activation of override controls, e.g. via external wiring
- Volume flow rates q_{vmin} and q_{vmax} are set in the factory and saved in the controller
- Modification of operating parameters by hand-held setting unit, PC software as well as smartphone and tablet app (TROX FlowCheck app)

General information	2	Variants	6
Function	3	Technical data	7
Specification text	4	Product details	13
Order code	5	Nomenclature	20

General information

Application

- All-in-one control devices for VAV terminal units
- Dynamic effective pressure transducer, control electronics and actuator combined in a single casing
- For use with clean air only
- Standard filtration in comfort conditioning systems allows for using the controller in the supply air without additional dust protection.
- Choice of various control options based on setpoint value default setting
- The room temperature controller, central BMS, air quality controller or similar units control the variable volume flow control by specifying the setpoint values via a communication interface or analogue signal
- Override controls for activating q_{vmin}, q_{vmax}, shut-off, OPEN position via MP-Bus or switch / relay possible
- Use service tool ZTH-EU, PC-Tool and the TROX FlowCheck app to configure the controller and the communication parameters

With heavy dust levels in the room
- Install suitable extract air filters upstream, as a partial volume flow is routed through the transducer for volume flow rate measurement

If the air is contaminated with dust, fluff or sticky components
- Use an expansion module with static effective pressure transducer, e.g. XD0 (analogue interface) or BUSN (with MP-Bus interface)

Control strategy

- The volume flow controller works independent of the duct pressure
- Differential pressure fluctuations do not result in permanent volume flow rate changes
- To prevent the control from becoming unstable, a dead band is allowed within which the damper blade does not move
- The flow rate range for the controller is set in the factory
  - q_{vmin}: minimum volume flow rate
  - q_{vmax}: maximum volume flow rate
- Operating parameters and signal voltage ranges are set in the factory according to the order code. They can later be changed with the service tools.

Interface

Communication interface for the volume flow rate setpoint and actual value, damper blade position and error status
- Analogue interface with adjustable signal voltage range
- Analogue signal for volume flow rate setpoint value
- Analogue signal for volume flow rate actual value (factory setting), alternatively: analogue signal for damper blade position (adjustment by others required)

Alternatively
- MP-Bus communication interface can be activated by others
- Communication interface can be set via service tools

Operating modes

- Variable or constant value

Variable operation (V)
- Setpoint value default setting via analogue interface or MP-Bus
- Signal voltage range corresponds to q_{vmin} – q_{vmax}

Constant value mode (F)
- A setpoint signal is not required, setpoint value corresponds to q_{vmin}

Operating parameters

- q_{vmin} = 0 – 100% of the nominal volume flow rate q_{vNom} can be set
- q_{vmax} = 20 – 100% of the nominal volume flow rate q_{vNom} can be set

Signal voltage ranges

- 0 – 10 V DC
- 2 – 10 V DC

Parts and characteristics

- Effective pressure transducer for dynamic measurements (dynamic transducer)
- Overload protection
- Actuator release button
- Shaft connection with clamping device or positive locking
- Connecting cable with 4 wires, approx. 2.95 in.
- Service interface for the connection of service tools
- NFC interface for using the TROX FlowCheck app
- Indicator lights for indicating the operating mode
- Supply voltage and communication not galvanically isolated

Construction

- Type LMV-D3L-MP-F TR for VAV terminal unit LVC
- Type LMV-D3-MP-F TR for VAV terminal unit TVR
- Type LMV-D3-MP TR for VAV terminal units TZ-Silenzio, TA-Silenzio, TVZ, TVA, TVM
- Type NMV-D3-MP TR for VAV terminal unit TVJ
- Type NMV-D3-MP TR for VAV terminal unit TVT up to size 39.37 × 11.81 or 31.5 × 15.75
- Type SMV-D3-MP TR for VAV terminal unit TVT from size 35.43 × 15.75

Commissioning

- Due to the volume flow rates set at the factory, always ensure that the terminal units are only installed at the specified locations
- Operating parameters can be adjusted by others (service tools)
- After successful installation and wiring, the controller is ready for use via the analogue interface
- MP-Bus: additional commissioning steps required

Useful additions

Service tools:
- Adjustment device ZTH-EU (order code AT-VAV-B)
- PC-Tool
- TROX FlowCheck app

Function

VAV terminal units control the volume flow in a closed loop, i.e. measurement – comparison – correction. The volume flow rate is measured via the effective pressure. This is done via an effective pressure sensor. An integrated differential pressure transducer converts the effective pressure into a voltage signal. The volume flow rate actual value is available as a voltage signal. The factory setting is such that 10 V DC always corresponds to the nominal flow rate (q_{vNom}). The volume flow rate setpoint value comes from a higher-level controller (e.g. room temperature controller, air quality controller, central BMS). Variable volume flow control results in a value between q_{vmin} and q_{max}. It is possible to override the room temperature control, e.g. by a complete shut-off of the duct. The controller compares the differential pressure setpoint value to the actual value and controls the actuator accordingly if there is a difference.

Principle of operation

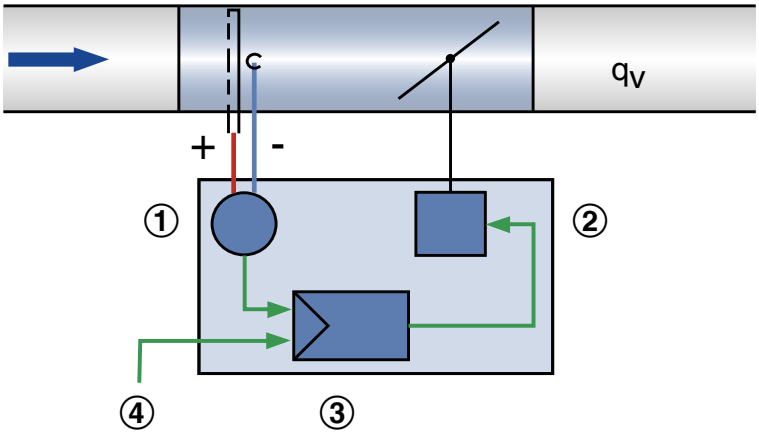

① Effective pressure transducer
② Actuator
③ Volume flow controller
④ Setpoint value signal

Specification text

This specification text describes the general properties of the product.

Category
- Compact controller for volume flow rate

Application
- Control of a constant or variable volume flow rate setpoint
- Electronic controller for applying a reference value and capturing an actual value signal
- The actual value signal relates to the nominal volume flow rate so that commissioning and subsequent adjustment are simplified
- Stand-alone operation or integration with a central BMS

Area of application
- Dynamic transmitter for clean air in ventilation and air conditioning systems

Actuator
- Integrated; slow running (runtime 110 – 150 s for 90°)

Installation orientation
- Either direction

Connection
- Connecting cable with 4 wires

Supply voltage
- 24 V AC/DC

Interface/signalling
- Analogue signal 0 – 10 V DC or 2 – 10 V DC or Belimo MP-Bus

Interface information
- Analogue: Volume flow rate setpoint and actual value signal
  - Actual value signal of volume flow rate set at the factory
  - Actual value signal can be reconfigured at the damper blade position by others
- MP-Bus: Volume flow rate setpoint and actual value, damper blade position, error status, etc.

System connections
MP-Bus for optional extensions:
- Suitable for TROX X-AIRCONTROL zone module X-AIR-ZMO-MP
- Gateways for Modbus, BACnet, EIB, e.g., Belimo UK24xxx
- Fan optimiser, e.g., Belimo COU24-A-MP
- In MP-Bus mode: Integration of a sensor or switch contact into the MP-Bus network

Special functions
- Activation of q_{vmin}, q_{vmid}, q_{vmax}, closed, open by external switch contacts/circuitry or MP-Bus
- Optional activatable operating modes: open loop: actuator with air flow measurement

Parameter setting
- Parameters specific to the VAV terminal unit are factory-set
- Operating values q_{vmin}, q_{vmax} factory-set
- Signal characteristic is factory-set

Subsequent adjustment using optional tools:
- Adjustment device, PC software (wired in each case)
- FlowCheck app (wireless via integrated NFC interface)

Order code

Control component BC0 (shown together with TVR as an example)

TVR – D – P1 – / 8 / D2 / BC0 / V 0 / 294.29 – 706.29 [cfm]
1 2 3 4 5 6 7 9 10 11

1 Type
TVR VAV terminal unit

2 Acoustic cladding
No entry: none
D With acoustic cladding

3 Material
No entry: galvanised sheet steel
P1 Powder-coated RAL 7001 (silver grey)
A2 Stainless steel construction

4 Duct connection
No entry: push-fit, suitable for ducts according to EN 1506; with groove for optional lip seal
FL Flanges on both ends

5 Nominal size [in.]
4, 5, 6, 8, 10, 12, 16

6 Accessories
No entry: without accessories

D2 Double lip seal both ends (push-fit only)
G2 Matching flanges for both ends (only with FL)

7 Attachments (control components)
BC0 Compact controller with dynamic transducer and both analogue and MP bus interfaces

9 Operating mode
F Constant value mode (one setpoint value, no external switch contact)
V Variable operation (adjustable setpoint value range)

10 Signal voltage range
0 0 – 10 V DC
2 2 – 10 V DC

11 Operating values for factory setting
Volume flow rate [cfm]

Depending on operating mode
F: q_{vconst}
V: q_{vmin} – q_{vmax}

Order example: TVR-D-P1/200/D2/BC0/V0/500-1200[m³/h]

Type	TVR
Acoustic cladding	With acoustic cladding
Material	Powder-coated RAL 7001 (silver grey)
Duct connection	Push-fit, suitable for ducts according to EN 1506; with groove for optional lip seal
Nominal size [in.]	8
Accessories	Double lip seal both ends
Attachments (control components)	BC0 – Compact controller with dynamic transducer and both analogue and MP bus interfaces
Operating mode	Variable operation
Signal voltage range	0 – 10 V DC
Operating values for factory setting	294.29 – 706.29 [cfm]

Variants

Compact controller BC0, positive lock connection (LVC, TVR)

1: VAV compact controller
2: Gear release button
3: Tube connections of effective pressure sensor
4: Service socket
5: Connecting cable

Compact controller BC0, positive lock connection (LVC, TVR)

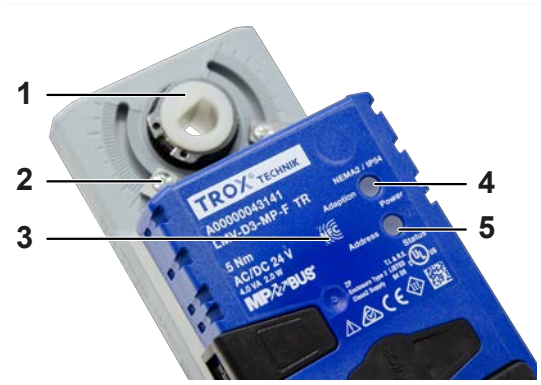

1: Clamping device
2: Rotation stop
3: NFC interface
4: Power LED
5: Status LED

Compact controller BC0 with axis clamping device

1: VAV compact controller
2: Gear release button
3: Tube connections of effective pressure sensor
4: Service socket
5: Connecting cable

Compact controller BC0 with axis clamping device

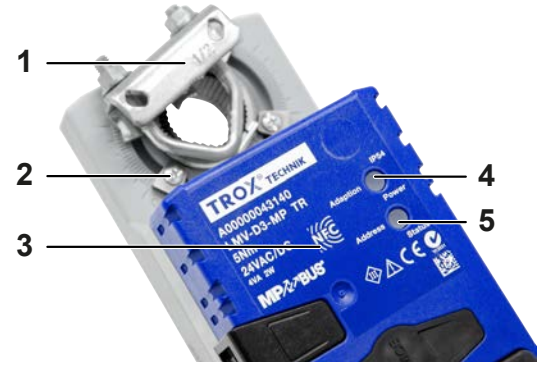

1: Clamping device
2: Rotation stop
3: NFC interface
4: Power LED
5: Status LED

Technical data

Compact controllers for VAV terminal units

VAV terminal units	Type	Part number
LVC	LMV-D3L-MP-F TR	A00000043143
TVR	LMV-D3-MP-F TR	A00000043141
TZ-Silenzio, TA-Silenzio, TVZ, TVA	LMV-D3-MP TR [1]	A00000043140
TVM	2 × LMV-D3-MP TR	A00000043140
TVJ	NMV-D3-MP TR	A00000043142
TVT up to 39.37 x 11.81 or 31.5 x 15.75	NMV-D3-MP TR	A00000043142
TVT from 35.43 × 15.75	SMV-D3-MP TR	A00000091878

Note: [1] LMV-D3-MP TR with clamping device can be used as a replacement part for LMV-D3-MP-F TR with positive lock connection

Compact controllers BC0, LMV-D3L-MP-F TR (for LVC only)

Compact controllers BC0, LMV-D3L-MP-F TR

Measurement principle/installation orientation	Dynamic measurement principle, position-independent
Nominal voltage	AC/DC 24 V
Nominal frequency	50/60 Hz
Functional range	19.2 – 28.8 V AC or 21.6 – 28.8 V DC
Power consumption – when running	2 W
Power rating	3.5 VA
Self-consumption (idle state)	1 W
Adjustable communication parameters for MP-Bus	Address: 1-8 (up to 8 MP-Bus nodes) Addressing: must be performed by others, e.g., with adjustment device or TROX FlowCheck app. Topology: star, ring, line, tree or mixed forms are permitted. Terminal resistor: not required
Torque	5 Nm
Run time for 90°	120 – 150 s
Setpoint value signal input	0 – 10 V DC or 2 – 10 V DC, input resistance > 100 kΩ
Actual value signal output	0 – 10 V DC or 2 – 10 V DC; max. 5mA
Connections	Connecting cable: approx. 2.95 ft, 0.006 x 0.001 in²
IEC protection class	III (protective extra-low voltage)
Protection level	IP 54
EC conformity	EMC to 2014/30/EU, low voltage to 2014/35/EU
Weight	1.1 lbs

Compact controllers BC0, LMV-D3-MP TR

Compact controllers BC0, LMV-D3-MP-F TR

Compact controllers BC0, LMV-D3-MP TR and LMV-D3-MP-F TR

Measurement principle/installation orientation	Dynamic measurement principle, position-independent
Nominal voltage	AC/DC 24 V
Nominal frequency	50/60 Hz
Functional range	19.2 – 28.8 V AC or 21.6 – 28.8 V DC
Power consumption – when running	2 W
Power rating	4 VA
Self-consumption (idle state)	1 W
Adjustable communication parameters for MP-Bus	Address: 1-8 (up to 8 MP-Bus nodes) Addressing: must be performed by others, e.g., with adjustment device or TROX FlowCheck app. Topology: star, ring, line, tree or mixed forms are permitted. Terminal resistor: not required
Torque	5 Nm
Run time for 90°	110 – 150 s
Setpoint value signal input	0 – 10 V DC or 2 – 10 V DC, input resistance > 100 kΩ
Actual value signal output	0 – 10 V DC or 2 – 10 V DC; 0.5 mA max.
Connections	Connecting cable: approx. 2.95 ft, 0.006 x 0.001 in²
IEC protection class	III (protective extra-low voltage)
Protection level	IP 54
EC conformity	EMC to 2014/30/EU
Weight	1.1 lbs

Compact controllers BC0, NMV-D3-MP TR

Compact controllers BC0, LMV-D3-MP-F TR

Compact controllers BC0, NMV-D3-MP TR and NMV-D3-MP-F TR

Measurement principle/installation orientation	Dynamic measurement principle, position-independent
Nominal voltage	AC/DC 24 V
Nominal frequency	50/60 Hz
Functional range	19.2 – 28.8 V AC or 21.6 – 28.8 V DC
Power consumption – when running	3 W
Power rating	5 VA
Self-consumption (idle state)	1.5 W
Adjustable communication parameters for MP-Bus	Address: 1-8 (up to 8 MP-Bus nodes) Addressing: must be performed by others, e.g., with adjustment device or TROX FlowCheck app. Topology: star, ring, line, tree or mixed forms are permitted. Terminal resistor: not required
Torque	10 Nm
Run time for 90°	110 – 150 s
Setpoint value signal input	0 – 10 V DC or 2 – 10 V DC, input resistance > 100 kΩ
Actual value signal output	0 – 10 V DC or 2 – 10 V DC; 0.5 mA max.
Connections	Connecting cable: approx. 2.95 ft, 0.006 x 0.001 in²
IEC protection class	III (protective extra-low voltage)
Protection level	IP 54
EC conformity	EMC to 2014/30/EU
Weight	1.54 lbs

Compact controllers BC0, SMV-D3-MP TR

Compactregler BC0, SMV-D3-MP TR

Measurement principle/installation orientation	Dynamic measurement principle, position-independent
Nominal voltage	AC/DC 24 V
Nominal frequency	50/60 Hz
Functional range	19.2 – 28.8 V AC or 21.6 – 28.8 V DC
Power consumption – when running	3 W
Power rating	5,5 VA
Self-consumption (idle state)	1.5 W
Adjustable communication parameters for MP-Bus	Address: 1-8 (up to 8 MP-Bus nodes) Addressing: must be performed by others, e.g., with adjustment device or TROX FlowCheck app. Topology: star, ring, line, tree or mixed forms are permitted. Terminal resistor: not required
Torque	10 Nm
Run time for 90°	110 – 150 s
Setpoint value signal input	0 – 10 V DC or 2 – 10 V DC, input resistance > 100 kΩ
Actual value signal output	0 – 10 V DC or 2 – 10 V DC; 0.5 mA max.
Connections	Connecting cable: approx. 2.95 ft, 0.006 x 0.001 in²
IEC protection class	III (protective extra-low voltage)
Protection level	IP 54
EC conformity	EMC to 2014/30/EU
Weight	0.7 kg

Commissioning

- On-site adjusting is not required
- As the volume flow rates are factory-set, the terminal units have to be installed at the specified locations
- After successful installation and wiring, the controller is ready for use by using the analogue interface
- Comply with the volume flow rate control ranges of the VAV terminal units, do not set a volume flow rate which is below the minimum flow rate
- For operation with MP-Bus interface: additional commissioning steps such as assigning a participant address are necessary

LED display and operation

Adjustment LED (green):

- Off: No supply voltage
- On: Operation
- Press key: Triggering of the rotation angle adjustment

Address LED (yellow):

- Off: Normal operation
- Flickering: MP communication active
- On: Adjustment or synchronisation in progress
- Flickering: Request for addressing from the MP master
- Press key: Confirmation of addressing

Service tool range of functions

Function/parameterisation	TROX FlowCheck app	PC-Tool	ZTH-EU
setting q_{vmin}, q_{vmax}	R, W	R, W	R, W
Mode, signal voltage range 0 – 10 V, 2 – 10 V DC	R, W	R, W	R, W
Carry out override controls	Yes	Yes	Yes
MP-Bus address	R, W	R, W	R, W
Trend display	Yes	Yes	-

R,W = Read and write access.
R = Read only
W = Write only
- = Function is not available with this service tool.

Product details

Analogue interface 0 – 10 V DC or 2 – 10 V DC

The analogue interface can be set for signal voltage range 0 – 10 V DC or 2 – 10 V DC using the service tools. The assignment of the setpoint value or actual value of the volume flow rate to the voltage signal is shown in the characteristic line displays.

Setpoint value default setting

Variable operation:

- In the variable operating mode, the setpoint value setting is set at cable wire Y with an analogue signal
- The selected signal voltage range 0 – 10 V or 2 – 10 V DC is assigned to the set volume flow rate range q_{vmin} – q_{vmax}
- Volume flow rate range q_{vmin} – q_{vmax} is set in the factory according to the order code
- Subsequent adjustment of q_{vmin} or q_{vmax} is possible using service tools, TROX FlowCheck App, adjustment device ZTH-EU or PC-Tool

Constant value mode:

- In the constant value mode operating mode, an analogue signal is not required at cable wire Y
- The set flow rate constant value q_{vmin} is used
- Volume flow rate q_{vmin} is set in the factory according to the order code
- Subsequent adjustment of q_{vmin} is possible using service tools, TROX FlowCheck App, adjustment device ZTH-EU or PC-Tool

Actual value as feedback for monitoring or tracking control

- The actual volume flow rate measured by the controller can be tapped as a voltage signal at cable wire U in the default setting
- The selected signal voltage range 0 – 10 V DC or 2 – 10 V DC is mapped to the volume flow rate range 0 – q_{vNom}
- The actual value output U can be reconfigured by others to output the damper position
- Selected signal voltage range 0 - 10 V DC or 2 - 10 V DC is then mapped to the damper blade position 0% (CLOSED) - 100% (OPEN).

Override control

For special operating situations, the volume flow controller can be put in a special operating mode (override control). The following modes are possible: control q_{vmin}, control q_{vmax}, damper blade in the OPEN position, damper blade CLOSED. Override control can be activated by:

- A suitable connection at signal input Y as per the connection diagrams through connection with external switching contacts/ relays. OPEN and CLOSED are only available if the controller is supplied with alternating current (AC).
- Service tools such as ZTH-EU, PC-Tool or TROX Flow-Check app are activated
- A bus timeout monitoring is activated. (only in MP-Bus operation)
- A control signal at signal input Y is activated (only override control CLOSED). See the following table (only in operation with analogue setpoint value)

Override control CLOSED via control signal on control signal Y

The override control CLOSE can also be activated by observing certain conditions with the command signal. The following table summarises the boundary conditions.

Signal voltage range	0 – 10 V DC		2 – 10 V DC	2 – 10 V DC	2 – 10 V DC
Operating parameter q_{vmin} (factory or customer setting)	q_{vmin} = 0	q_{vmin} > 0	q_{vmin} = 0	q_{vmin} > 0	
Shut-off voltage (PC-Tool)	Not possible		Not applicable	0.1 V [2]	0.5 V [2]
Damper closes when Y is reached	Y < 0.45 V DC	Not possible	Y < 2.36 V DC	Y < 0.1 V DC	Y < 0.5 V DC
Control is activated when Y is reached	Y > 0.55 V DC (*1)	Y > 0 V DC	Y > 2.44 V DC	Y > 0.1 – 2 V DC: q_{vmin} Y > 2 – 10 V DC: q_{vmin} – q_{vmax}	Y > 0.5 – 2 V DC: q_{vmin} Y > 2 – 10 V DC: q_{vmin} – q_{vmax}

Notes:

[1] Activation of control operation with 0 –10 V and q_{vmin} set to = 0:

The applicable volume flow rate range depends on the basic unit (TVJ/TVT: 20 – 100% of q_{vnom}; all other basic units: 10 – 100 % of q_{vnom}). This means that setpoint defaults can be achieved only from 2 V DC (with TVJ/TVT) or 1 V DC (with other basic units).

[2] Shut-off voltage 0.1 V DC or 0.5 V DC:

If there is a possibility or risk that the 0.1 V setpoint may not be undershot on a system (DDC output or long cable length), the shut-off voltage can be changed to 0.5 V with PC-Tool. This is only possible with signal voltage range 2 – 10 V DC.

Note on mode setting 0.1 V DC or 0.5 V DC

If there is a possibility or risk that the 0.1 V setpoint may not be undershot on a system (DDC output or long cable length), the shut-off voltage can be changed to 0.5 V with PC-Tool. This is only possible with signal voltage range 2 – 10 V DC.

Digital communication interface MP bus

General information

MP bus is not an open system, but manufacturer-dependent bus system for which Belimo and its partner companies provide components and software. Examples include the TROX XAIR-ZMO-MP zone module and software for the X-AIRCONTROL room control system, also the UK24xxx Belimo gateways and the fan optimiser.
MP bus allows you to have setpoint defaults and override controls preset and to read out damper positions and volume flow rates.
As for the network, any topology can be used: star, ring, line, tree and hybrid topologies.
Neither special cables nor terminal resistors are required for the wiring, but the cable lengths are limited and depend on:

- the combined performance data of the connected MP devices
- whether AC 24 V or DC 24 V voltage is used
- the cable cross section

Example: MP bus with 5 LMV-D3-MP compact controllers on 24 V AC supply. Total power rating: 5 × 4 VA = 20 VA.

- A cable with 0.001 in^2 cross section must not be longer than 91.86 ft.
- A cable with 0.002 in^2 cross section must not be longer than 177.17 ft.

For more information on MP buses see the Belimo documentation at https://www.belimo.com.

VAV compact controller with MP bus

Control component BC0 is fitted with an MP bus communication interface and can be interconnected with up to 8 TROX/Belimo MP devices (damper actuators, valve actuators, VAV controllers) on a Belimo MP bus. The controller on the MP bus receives its control signal from the higher-level central BMS so that the volume flow rate setpoint can be achieved.
MP bus mode starts automatically as soon as the control component is assigned an MP address with a service tool. A standard Compact controller with an MP address becomes a bus-compatible system controller with a wide range of additional benefits.
MP bus requires that the U connection is used. The U connection can then no longer be used for analogue actual value feedback.

Characteristic of the setpoint value signal

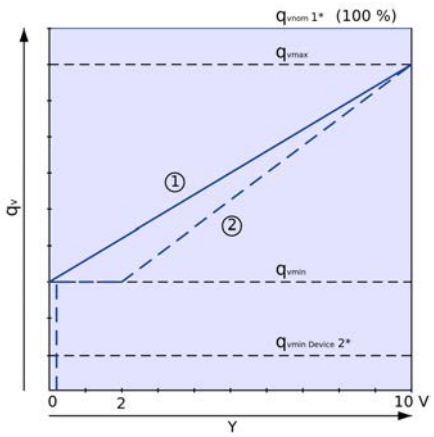

① Signal voltage range 0 – 10 V
② Signal voltage range 2 – 10 V
1* = $q_{vnom;}$ nominal volume flow rate
2* = $q_{vmin\ unit}$ minimum controllable volume flow rate

Characteristic of the actual value signal

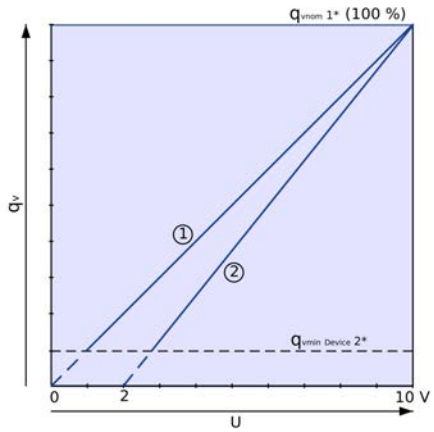

① Signal voltage range 0 – 10 V
② Signal voltage range 2 – 10 V
1* = q_{vnom} Nominal volume flow rate
2* = $q_{vmin\ unit}$ minimum controllable volume flow rate

Calculation of volume flow rate setpoint value at 0 – 10 V

$$q_{vset} = \frac{Y}{10\ V} \times (q_{vmax} - q_{vmin}) + q_{vmin}$$

Calculation of volume flow rate actual value at 0 – 10 V

$$q_{vact} = \frac{U}{10\ V} \times q_{vnom}$$

Calculation of nominal volume flow at 2 – 10 V

$$q_{set} = \frac{Y - 2\ V}{(10\ V - 2\ V)} \times (q_{vmax} - q_{vmin}) + q_{vmin}$$

Calculation of volume flow rate actual value at 2 – 10 V

$$q_{vact} = \frac{U - 2}{10\ V - 2\ V} \times q_{vnom}$$

Connecting cable core identification BC0

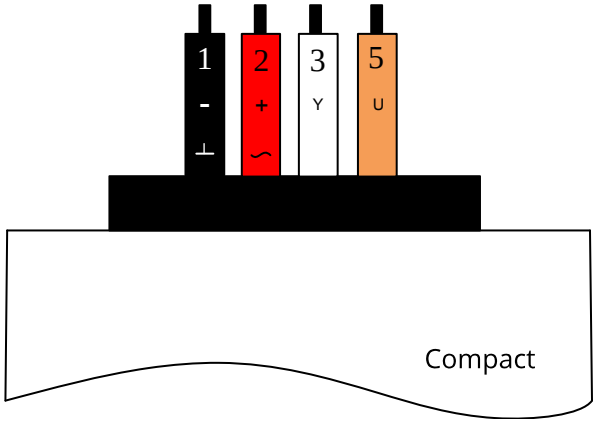

⊥, – = Ground, neutral
~, + = Supply voltage 24 V AC/DC
Y = Setpoint value signal and override controls
U = Actual value signal or MP bus or service tool connection

Note

- Setpoint value and actual value signals depend on the signal voltage range, either 0 – 10 V DC or 2 – 10 V DC

Analogue signalling 0 (2) – 10 V and override control

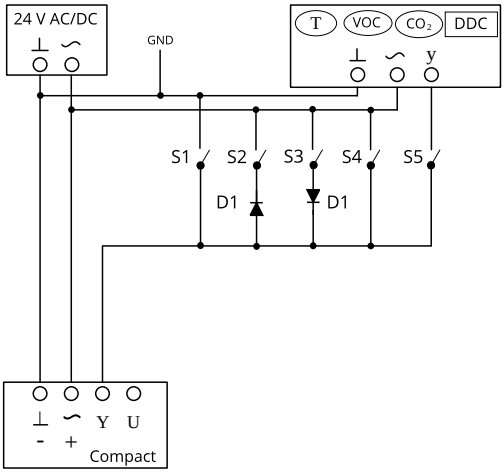

Explanation

⊥, – = Ground, neutral
~, + = Supply voltage 24 V AC/DC
Y = Setpoint value signal and override control
U = Actual value signal U or MP bus

Note

T, VOC, CO_2, DDC = Setpoint value default setting q_v
D1 = Diode for override control, e.g. 1N4007

- When combining several override controls the switches must be interlocked to prevent short-circuits
- Setpoint value and actual value signals depend on the signal voltage range, either 0 – 10 V DC or 2 – 10 V DC

Switch settings

Constant value mode q_{vmin} (override control q_{vmin})

All switch contacts, i.e. S1 – S5, have to be open; only the supply voltage needs to be connected

Variable operating mode q_{vmin} – q_{vmax}

- For room temperature control, for example
- Only S5 has to be closed

Override control q_{vmax}

- Only S4 has to be closed

Override control, damper blade OPEN

- Only S3 has to be closed
- Only with AC voltage supply

Override control, damper blade CLOSED

- Only S2 has to be closed
- Only with AC voltage supply

Override control, damper blade CLOSED (alternative)

- Only S1 has to be closed
- Only with signal voltage range 2 – 10 V DC

Damper blade CLOSED with setpoint value signal

- Only S5 has to be closed
- For other parameters, e.g. signal voltage range, q vmin setting and shut-off voltage (if applicable), see the table with product details.

Control input signal via MP bus

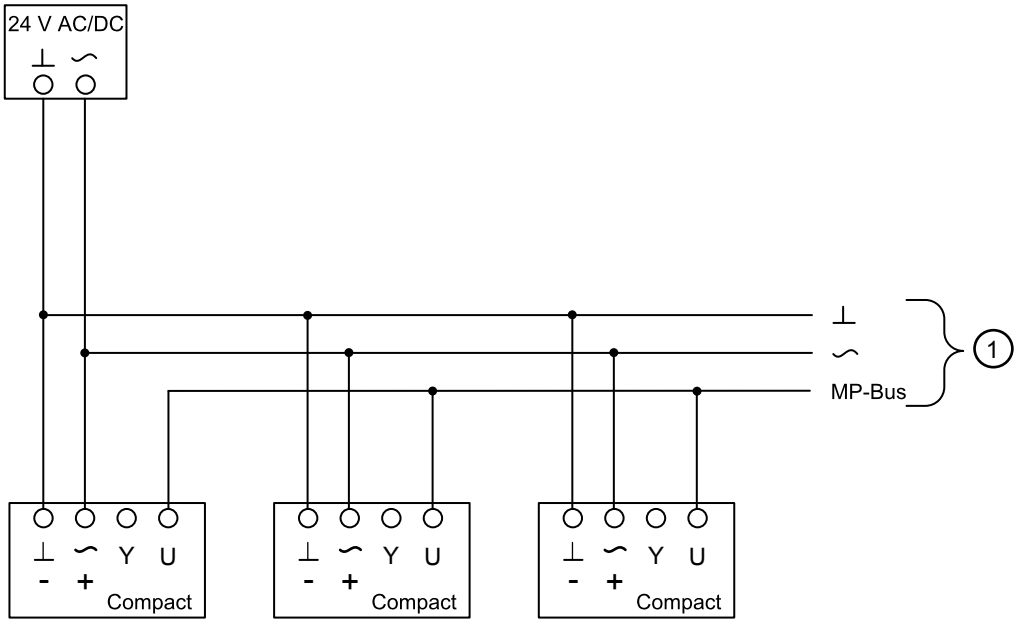

⊥, – = Ground, neutral
~, + = Supply voltage 24 V AC/DC
U = MP bus

Note

- The number of devices on the MP bus depends on the type of MP bus devices
- ① = up to 8 VAV Compact controllers on an MP bus
- Supply voltage and communication not galvanically isolated
- Voltage supply: Make sure that all devices on the bus have the same GND reference point.

Nomenclature

q_{vNom} [cfm]
Nominal flow rate (100 %): The value depends on product type, nominal size and control component (attachment). Values are published on the internet and in technical leaflets and stored in the Easy Product Finder design program. Reference value for calculating percentages (e.g. q_{vmax}). Upper limit of the setting range and maximum volume flow rate setpoint value for the VAV terminal unit.

$q_{vmin\ Unit}$ [cfm]
Technically possible minimum volume flow rate: The value depends on product type, nominal size and control component (attachment). Values are stored in the Easy Product Finder design program. Lower limit of the setting range and minimum volume flow rate setpoint value for the VAV terminal unit. Setpoint values below $q_{vmin\ unit}$ (if q_{vmin} equals zero) may result in unstable control or shut-off.

q_{vmax} [cfm]
Upper limit of the operating range for the VAV terminal unit that can be set by customers: q_{vmax} can be set to less than or equal to q_{vnom} For analogue signalling to volume flow controllers (typically used), the maximum value of the setpoint signal (10 V) is assigned the set maximum value (q_{vmax}) (see characteristic).

q_{vmin} [cfm]
Lower limit of the operating range for the VAV terminal unit that can be set by customers: q_{vmin} should be set to less than or equal to q_{vmax} . Do not set q_{vmin} to less than $q_{vmin\ unit}$ as the control may become unstable or the damper blade may close. q_{vmin} may equal zero. In case of analogue signalling to volume flow controllers (which are typically used), the set minimum value (q_{vmin}) is allocated to the minimum setpoint signal (0 or 2 V) (see characteristic).

q_v [cfm]
Volume flow rate

VAV terminal unit
Consists of a basic unit with an attached control component.

Basic unit
Unit for controlling a volume flow without an attached control component. The main components include the casing with sensor(s) to measure the effective pressure and the damper blade to restrict the volume flow. The basic unit is also referred to as a VAV terminal unit. Important distinguishing features: Geometry or unit shape, material and types of connection, acoustic characteristics (e.g. acoustic cladding or integral sound attenuator), volume flow rate range.

Control component
Electronic unit(s) mounted on the basic unit to control the volume flow rate or the duct pressure or the room pressure by adjusting the damper blade position. The electronic unit consists basically of a controller with effective pressure transducer (integral or external) and an integral actuator (Easy and Compact controllers) or external actuator (Universal or LABCONTROL controllers). Important distinguishing features: Transducer: dynamic transducer for clean air or static transducer for contaminated air. Actuator: slow-running actuator as standard, spring return actuator for safe position, or fast-running actuator. Interface: analogue interface or digital bus interface for the capturing of signals and data.